AS 470 Universal 4T and AS 470 AS – ET documentation – Motor with blade cover

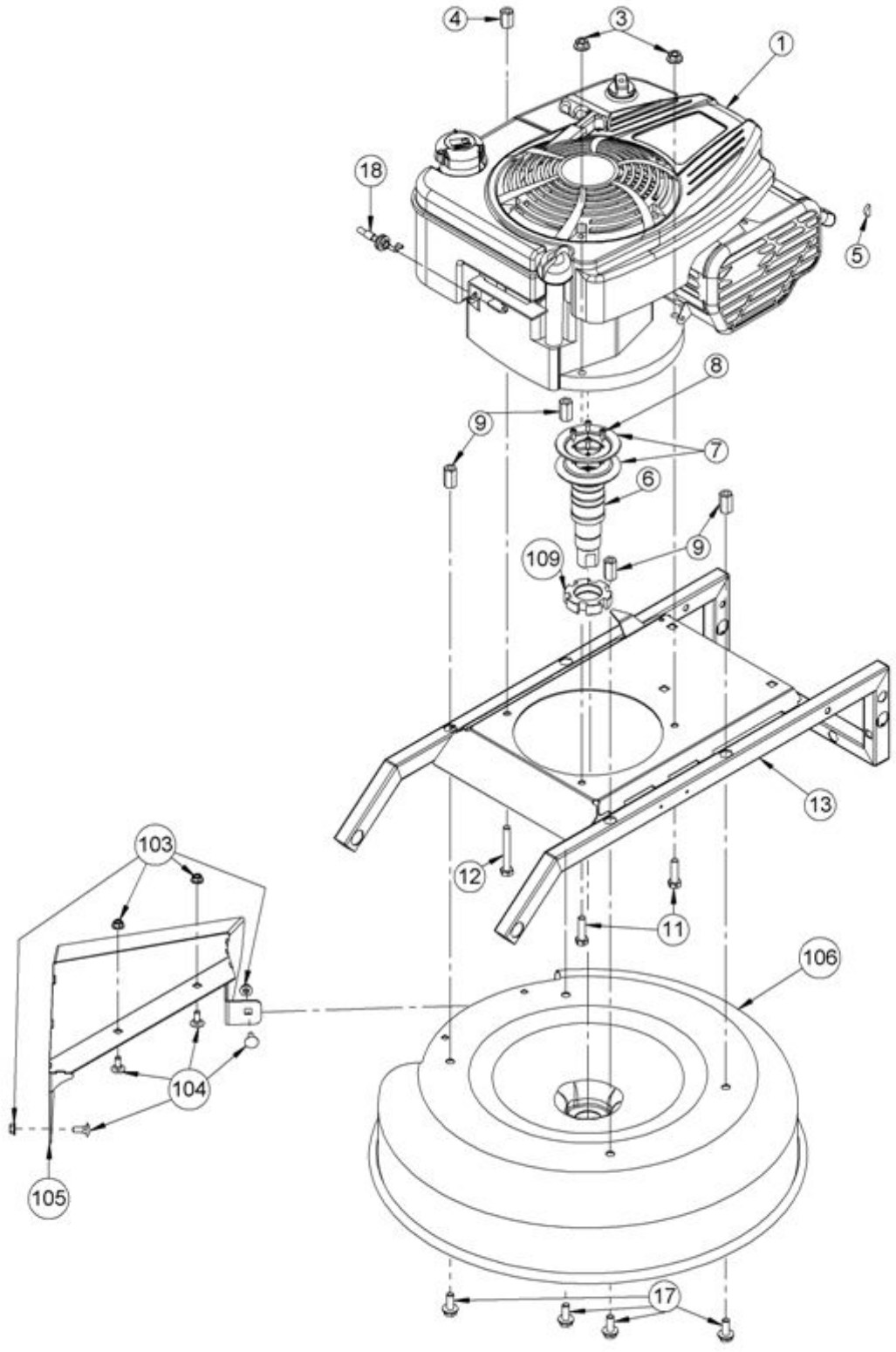

Motor mit Messerhaube AS 470 AS

AS 470 Universal 4T and AS 470 AS – ET documentation – Motor with blade cover

Pos	Art-Nr.	E-Nr.	Menge	Beschreibung	Modell	Info
1	G00501035	E12604	1	Engine B&S 800 E		
3	G00007042	E06037	2	Selflocking nut with serrated bearing (3		
4	G00007061	E10018	1	Connection nut		
5	G07866007	E10162	1	Curved washer		
6	G47023002	E12713	1	Blade carrier		
7	G04825016	E10457	2	Belt pulley dw 70		
8	G07833029	E08544	4	Hexagon socket head cap screw (5 Stk.)		
9	G07908002	E12692	4	Hex nut (10 Stk.)		
11	G07838031	E03951	1	Hexagon screw (5 Stk.)		
12	G07837005	E03142	1	Hexagon screw (4 Stk.)		
13	G47020002	E12697	1	Pipe frame AS 470		
17	G00009175	E12497	4	Dome head screw with Torx (2 Stk.)		
18	G00020168	E11837	1	Engine brake cable		
103	G00007041	E05975	4	Selflocking nut with serrated bearing (3		
104	G07827003	E04262	4	Mushroom head square neck bolt (5 Stk.)		
105	G47020021	E13066	1	Impact protection		
106	G47020020	E13065	1	Hood AS 470 AS		
109	~~G00028068~~	~~E13141~~	1	~~Replaced by G47023005~~		
	G47023005	G47023005	1	Lagerhülse m. Lager u. WDR		

AS 470 Universal 4T and AS 470 AS – ET documentation – Motor with blade cover from serial No. 026516030001

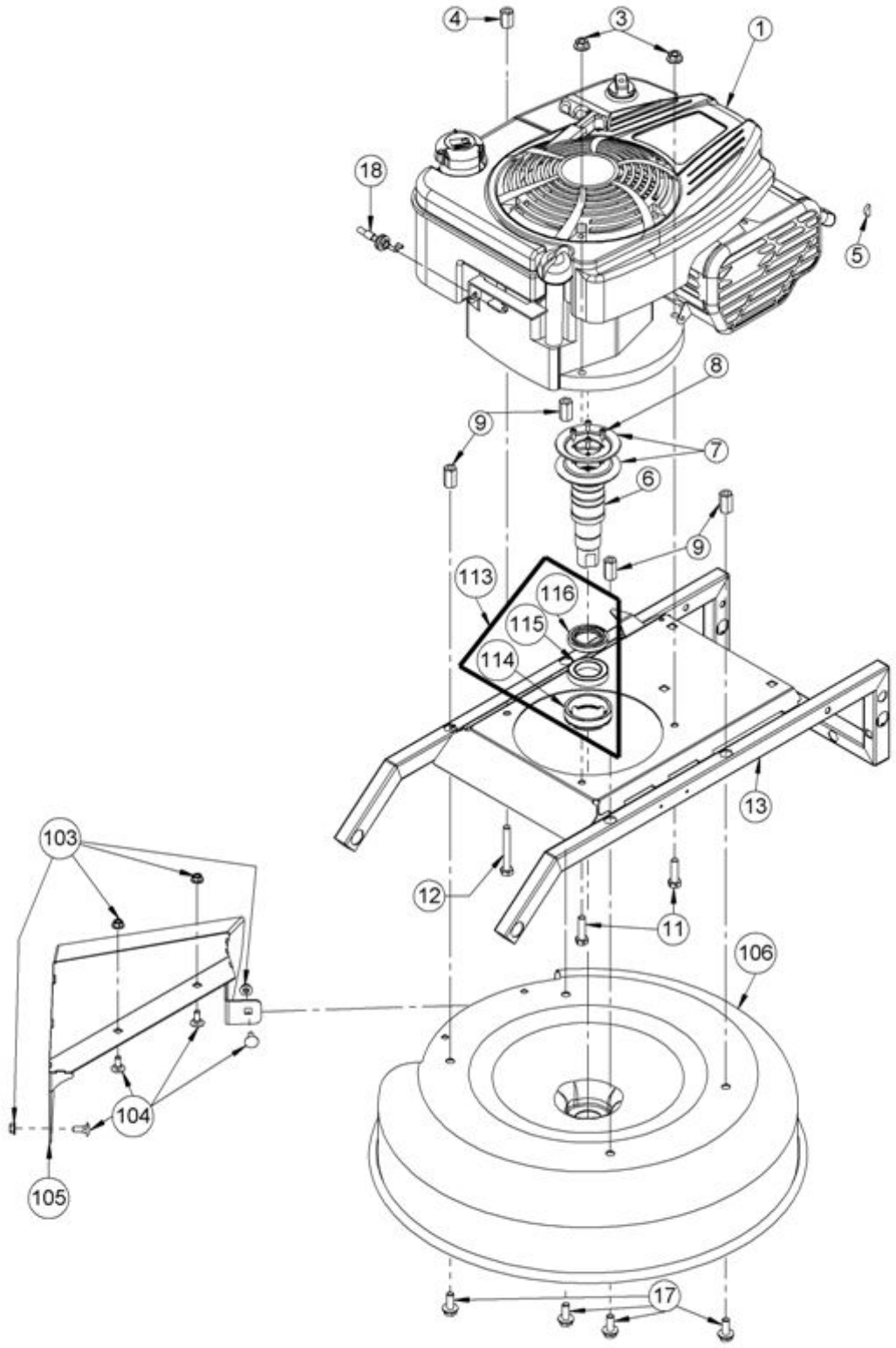

Motor mit Messerhaube AS 470 Universal 4T

AS 470 Universal 4T and AS 470 AS – ET documentation – Motor with blade cover from serial No. 026516030001

Pos	Art-Nr.	E-Nr.	Menge	Beschreibung	Modell	Info
1	G00501035	E12604	1	Engine B&S 800 E		
3	G00007042	E06037	2	Selflocking nut with serrated bearing (3		
4	G00007061	E10018	1	Connection nut		
5	G07866007	E10162	1	Curved washer		
6	G47023002	E12713	1	Blade carrier		
7	G04825016	E10457	2	Belt pulley dw 70		
8	G07833029	E08544	4	Hexagon socket head cap screw (5 Stk.)		
9	G07908002	E12692	4	Hex nut (10 Stk.)		
11	G07830028	E06855	2	Deep groove ball bearing		
12	G07837005	E03142	1	Hexagon screw (4 Stk.)		
13	G47020002	E12697	1	Pipe frame AS 470		
17	G00009175	E12497	4	Dome head screw with Torx (2 Stk.)		
18	G00020168	E11837	1	Engine brake cable		
103	G00007041	E05975	4	Selflocking nut with serrated bearing (3		
104	G07827003	E04262	4	Mushroom head square neck bolt (5 Stk.)		
105	G47020021	E13066	1	Impact protection		
106	G47020020	E13065	1	Hood AS 470 AS		
113	G47023005	G47023005	1	Lagerhülse m. Lager u. WDR		
114	G47023004	G47023004	1	Bearing sleeve		
115	G07830040	E10454	1	Deep groove ball bearing		
116	G07858026	G07858026	1	Shaft seal ring		

AS 470 4T A and AS 470 A SuperClip from serial No. 025513030001 – ET documentation – Front wheel

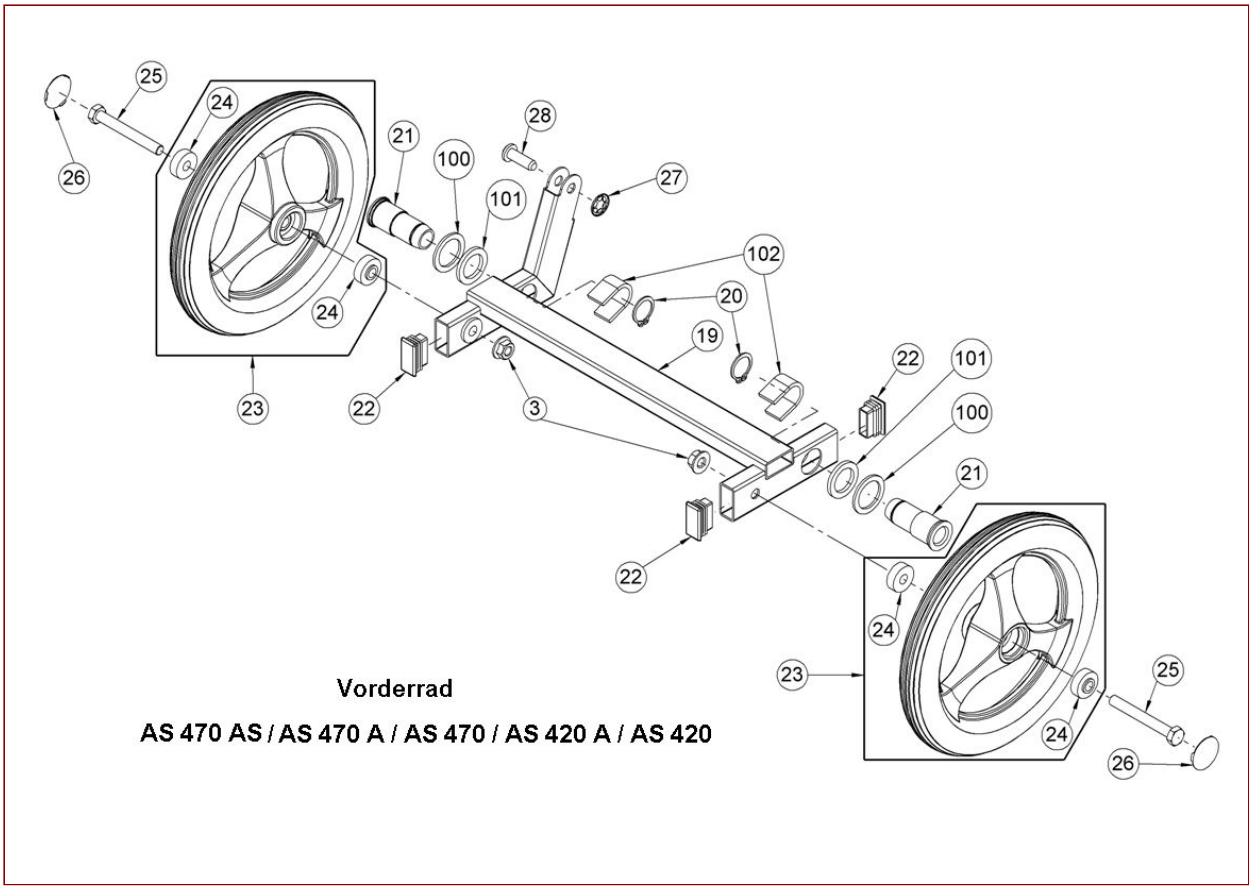

Vorderrad

AS 470 AS / AS 470 A / AS 470 / AS 420 A / AS 420

AS 470 4T A and AS 470 A SuperClip from serial No. 025513030001 – ET documentation – Front wheel

Pos	Art-Nr.	E-Nr.	Menge	Beschreibung	Modell	Info
3	G00007042	E06037	2	Selflocking nut with serrated bearing (3		
19	G47021008	E12695	1	Front wheel axle		
20	G07822013	E07726	2	Circlip for shaft (4 Stk.)		
21	G47020006	E12704	2	Bearing sleeve without DU bush		
22	G00029027	E12728	3	Lamella plugs (10 Stk.)		
23	G53121017	E12408	2	Wheel Ø 200		
24	G51050003	E12739	4	Ball bearing (2 Stk.)		
25	G07837041	E04944	2	Hexagon screw (3 Stk.)		
26	G53121018	E12409	2	Cap for wheel Ø 200		
27	G00027001	E04567	1	Shaft locking clip		
28	G07886001	E04476	1	Bolt with head		
100	G00010139	E13014	2	Disc		
101	G00008198	E13012	2	Disc		
102	G00008199	E13013	2	Band		

AS 420 4T A and AS 420 A SuperClip from serial No. 025713030001 – ET documentation – Back wheel with drive

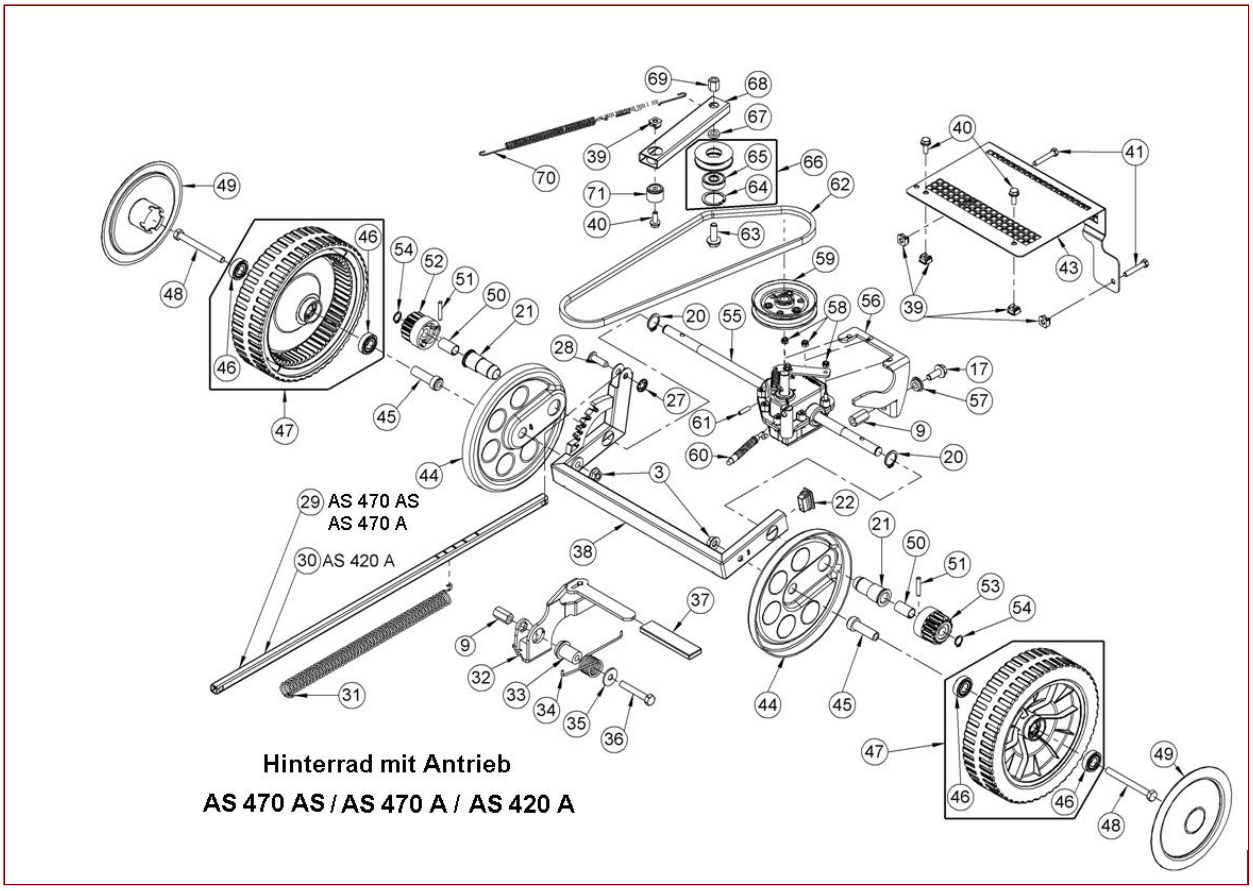

AS 420 4T A and AS 420 A SuperClip from serial No. 025713030001 – ET documentation – Back wheel with drive

Pos	Art-Nr.	E-Nr.	Menge	Beschreibung	Modell	Info
3	G00007042	E06037	2	Selflocking nut with serrated bearing (3		
9	G07908002	E12692	2	Hex nut (10 Stk.)		
17	G00009108	E08177	1	Hexagon screw with serration (3 Stk.)		
20	G07822013	E07726	2	Circlip for shaft (4 Stk.)		
21	G47020006	E12704	2	Bearing sleeve without DU bush		
22	G00029027	E12728	1	Lamella plugs (10 Stk.)		
27	G00027001	E04567	1	Shaft locking clip		
28	G07886001	E04476	1	Bolt with head		
29	G47020003	E12701	1	Height adjustment rod AS 470		
30	G47020203	E12700	1	Height adjustment rod AS 420		
31	G00002075	E12705	1	Draw spring		
32	G47020008	E12715	1	Notch lever		
33	G00024065	E12720	1	Sleeve		
34	G00003047	E12723	1	Leg spring		
35	G07880006	E03957	1	Disc (20 Stk.)		
36	G07837020	E03924	1	Hexagon screw (4 Stk.)		
37	G00029005	E10169	1	Handle		
38	G47021004	E12693	1	Rear wheel axle		
39	G00007046	E06672	5	Box nut (2 Stk.)		
40	G00009094	E07247	3	Locking screw (2 Stk.)		
41	G07837024	E04058	2	Hexagon screw (10 Stk.)		
43	G47026001	E12729	1	Belt covering		
44	G47021003	E12615	2	Cover for wheel		
45	G47021012	E12721	2	Wheel bolt		
46	G07830013	E04331	4	Deep groove ball bearing		
47	G47021001	E12613	2	Wheel		
48	G07837047	E05681	2	Hexagon screw (2 Stk.)		
49	G47021002	E12614	2	Wheel trim		
50	G00028022	E06364	2	DU bush		
51	G04225004	E04680	2	Needle roller		
52	G47030002	E12690	1	Pinion right		
53	G47030003	E12689	1	Pinion left		
54	G07822005	E03229	2	Circlip for shaft (10 Stk.)		
55	G47030001	E12462	1	Transmission		
56	G47030004	E12691	1	Transmission holder		
57	G00024028	E07681	1	Switch lever bearing		
58	G07846002	E01932	3	Self-locking hex nut (5 Stk.)		
59	G04525002	E05203	1	Belt pulley total		
60	G00020176	E12719	1	Drive cable		
61	G07853025	E04999	1	Spring pin (5 Stk.)		
62	G07857050	E12702	1	V-belt		
63	G00009085	E06761	1	Hexagon screw		
64	G07823016	E07209	1	Circlip for drilled hole (2 Stk.)		
65	G07830025	E06524	1	Deep groove ball bearing		
66	G06525063	E07208	1	Tension pulley with ball bearing		
67	G00024063	E12706	1	Sleeve		
68	G47025001	E12712	1	Tension lever		
69	G00007081	E12549	1	Special nut		
70	G00002076	E12709	1	Draw spring		
71	G00024064	E12707	1	Sleeve		

AS 470 Universal 4T and AS 470 AS – ET documentation – Back wheel with drive from serial No. 026515040001

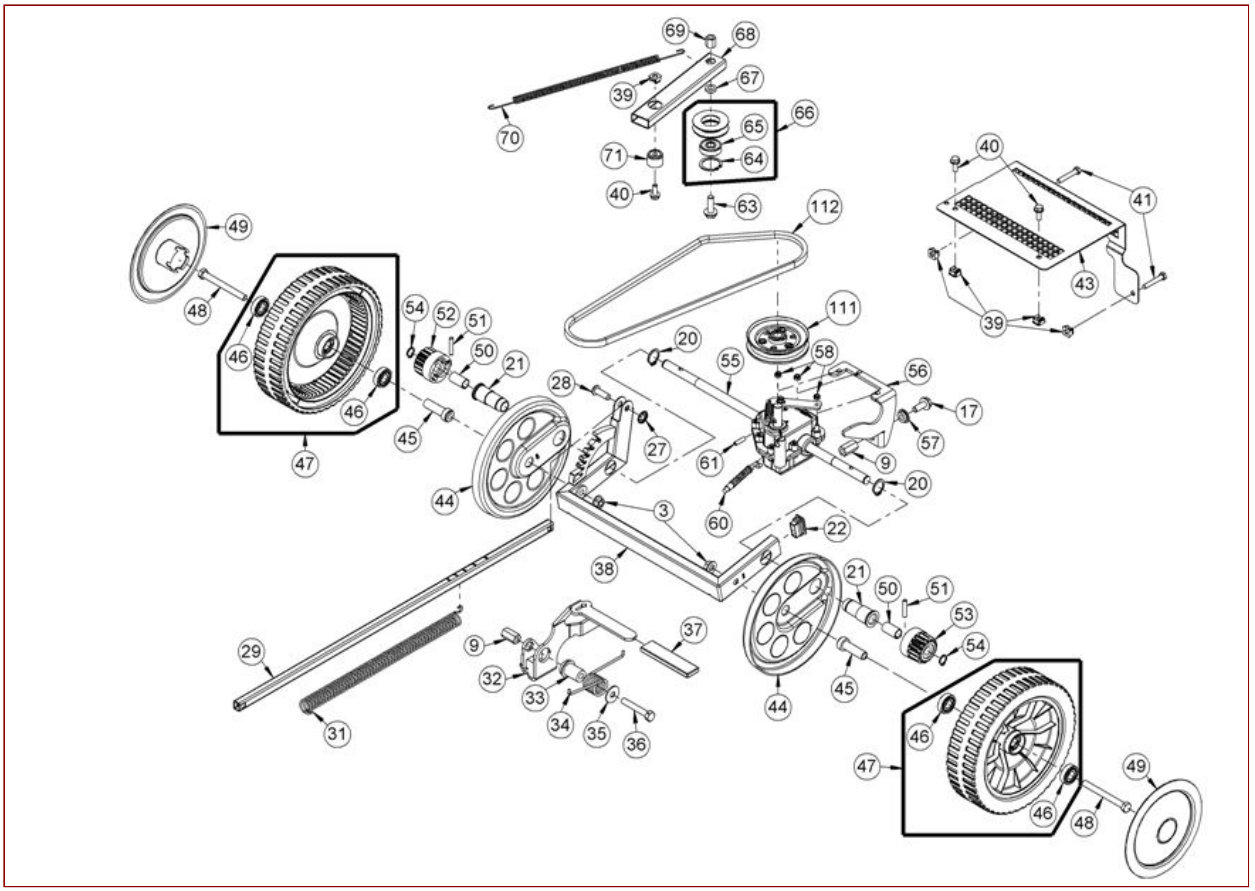

AS 470 Universal 4T and AS 470 AS – ET documentation – Back wheel with drive from serial No. 026515040001

Pos	Art-Nr.	E-Nr.	Menge	Beschreibung	Modell	Info
3	G00007042	E06037	2	Selflocking nut with serrated bearing (3		
9	G07908002	E12692	2	Hex nut (10 Stk.)		
17	G00009108	E08177	1	Hexagon screw with serration (3 Stk.)		
20	G07822013	E07726	2	Circlip for shaft (4 Stk.)		
21	G47020006	E12704	2	Bearing sleeve without DU bush		
22	G00029027	E12728	1	Lamella plugs (10 Stk.)		
27	G00027001	E04567	1	Shaft locking clip		
28	G07886001	E04476	1	Bolt with head		
29	G47020003	E12701	1	Height adjustment rod AS 470		
31	G00002075	E12705	1	Draw spring		
32	G47020008	E12715	1	Notch lever		
33	G00024065	E12720	1	Sleeve		
34	G00003047	E12723	1	Leg spring		
35	G07880006	E03957	1	Disc (20 Stk.)		
36	G07837020	E03924	1	Hexagon screw (4 Stk.)		
37	G00029005	E10169	1	Handle		
38	G47021004	E12693	1	Rear wheel axle		
39	G00007046	E06672	5	Box nut (2 Stk.)		
40	G00009094	E07247	3	Locking screw (2 Stk.)		
41	G07837024	E04058	2	Hexagon screw (10 Stk.)		
43	G47026001	E12729	1	Belt covering		
44	G47021003	E12615	2	Cover for wheel		
45	G47021012	E12721	2	Wheel bolt		
46	G07830013	E04331	4	Deep groove ball bearing		
47	G47021001	E12613	2	Wheel		
48	G07837047	E05681	2	Hexagon screw (2 Stk.)		
49	G47021002	E12614	2	Wheel trim		
50	G00028022	E06364	2	DU bush		
51	G04225004	E04680	2	Needle roller		
52	G47030002	E12690	1	Pinion right		
53	G47030003	E12689	1	Pinion left		
54	G07822005	E03229	2	Circlip for shaft (10 Stk.)		
55	G47030001	E12462	1	Transmission		
56	G47030004	E12691	1	Transmission holder		
57	G00024028	E07681	1	Switch lever bearing		
58	G07846002	E01932	3	Self-locking hex nut (5 Stk.)		
60	G00020176	E12719	1	Drive cable		
61	G07853025	E04999	1	Spring pin (5 Stk.)		
63	G00009085	E06761	1	Hexagon screw		
64	G07823016	E07209	1	Circlip for drilled hole (2 Stk.)		
65	G07830025	E06524	1	Deep groove ball bearing		
66	G06525063	E07208	1	Tension pulley with ball bearing		
67	G00024063	E12706	1	Sleeve		
68	G47025001	E12712	1	Tension lever		
69	G00007081	E12549	1	Special nut		
70	G00002076	E12709	1	Draw spring		
71	G00024064	E12707	1	Sleeve		
111	G47025003	G47025003	1	Belt pulley		
112	G07857052	G07857052	1	V-belt		

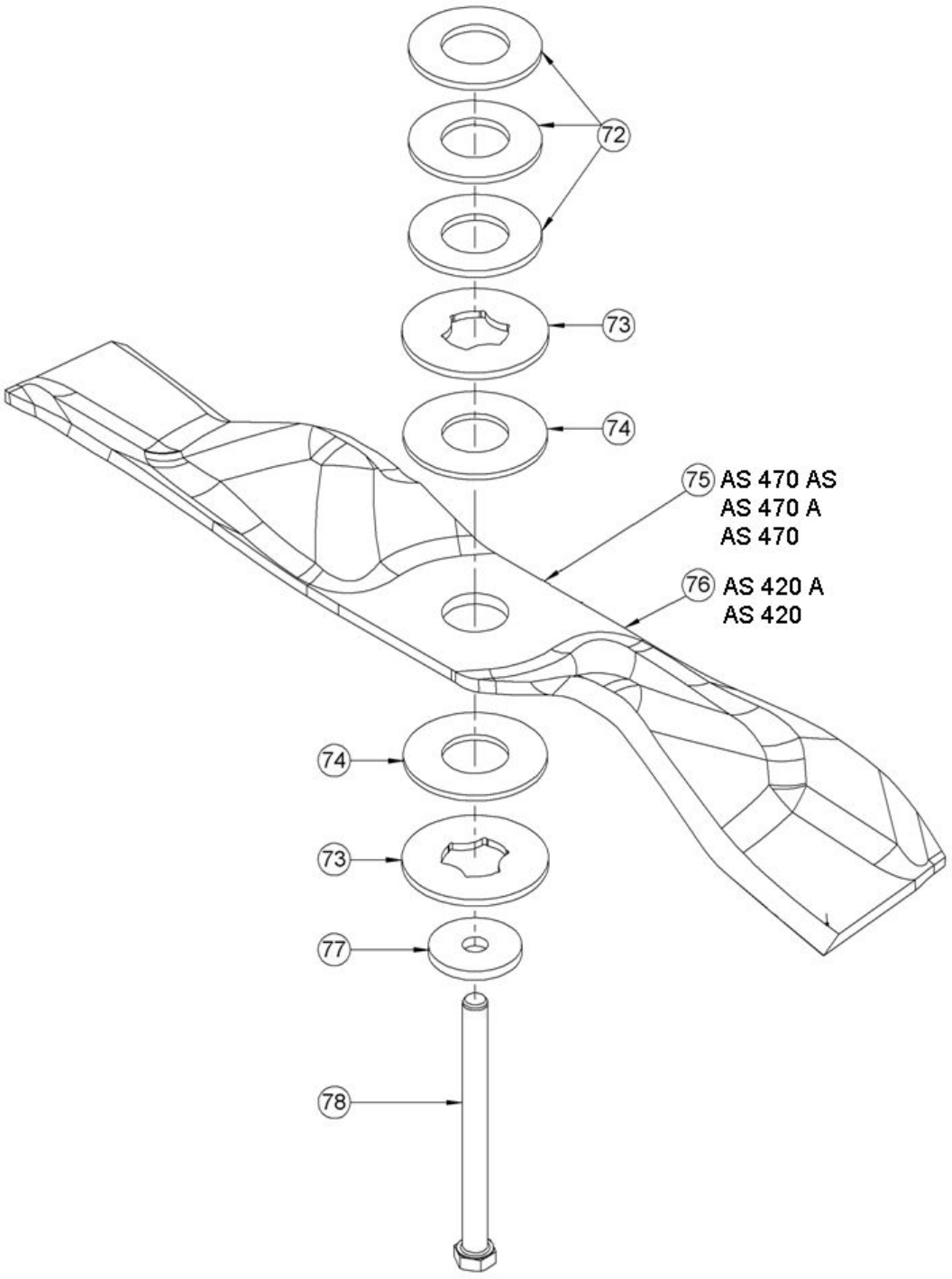

Messer mit Befestigung

AS 470 AS / AS 470 A / AS 470 / AS 420 A / AS 420

AS 420 4T and AS 420 SuperClip from serial No. 025613030001 – ET documentation – Blade with fixing

Pos	Art-Nr.	E-Nr.	Menge	Beschreibung	Modell	Info
72	G07856013	E10128	3	Disc spring		
73	G00010135	E12708	2	Pressure plate		
74	G00019059	E10016	2	Slide washer		
75	G47023001	E12519	1	Mulch blade AS 470		
76	G47023201	E12520	1	Mulch blade AS 420		
77	G00010119	E08893	1	Disc		
78	G00009144	E10463	1	Inch screw		

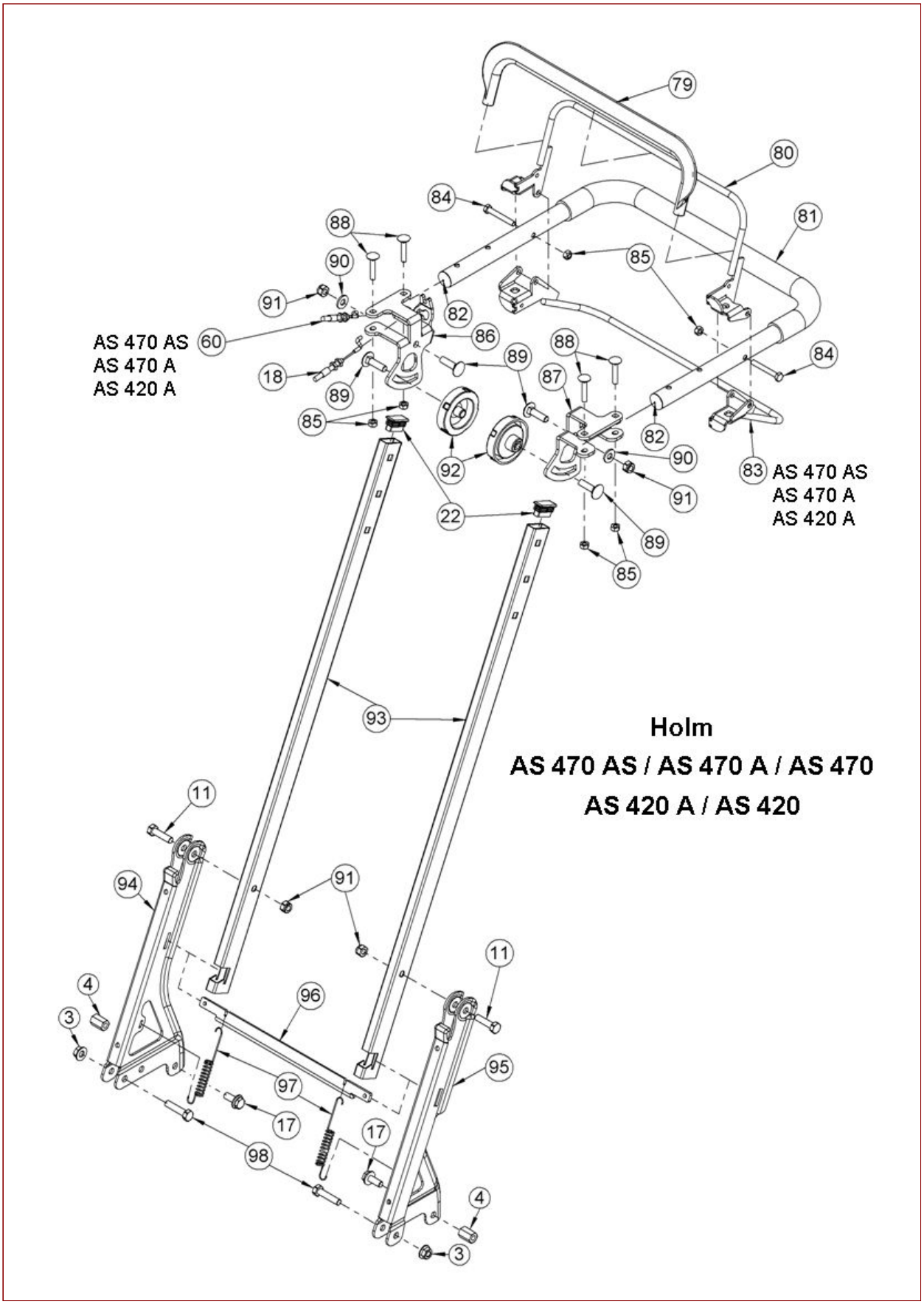
79
80
81
84
88
90
91
85
82
86
AS 470 AS
AS 470 A
AS 420 A
60
18
89
87
92
22
83
AS 470 AS
AS 470 A
AS 420 A
93
Holm
AS 470 AS / AS 470 A / AS 470
AS 420 A / AS 420
11
94
96
4
3
97
17
98
95

Pos	Art-Nr.	E-Nr.	Menge	Beschreibung	Modell	Info
3	G00007042	E06037	2	Selflocking nut with serrated bearing (3		
4	G00007061	E10018	2	Connection nut		
11	G07838031	E03951	2	Hexagon screw (5 Stk.)		
17	G00009108	E08177	2	Hexagon screw with serration (3 Stk.)		
18	G00020168	E11837	1	Engine brake cable		
22	G00029027	E12728	2	Lamella plugs (10 Stk.)		
60	G00020176	E12719	1	Drive cable		
79	G47022001	E12703	1	Cover for brake bar		
80	G47022010	E12717	1	Brake bar		
81	G47022021	E12726	1	Retaining bracket with soft tube		
82	G00029025	E11722	2	Lamella plugs (4 Stk.)		
83	G47022014	E12718	1	Drive bar		
84	G07837068	E07643	2	Hexagon screw (2 Stk.)		
85	G07906002	E06667	6	Self-locking hex nut (10 Stk.)		
86	G47022016	E12724	1	Bar holder right		
87	G47022015	E12725	1	Bar holder left		
88	G07827012	E05559	4	Mushroom head square neck bolt (2 Stk.)		
89	G07827024	E12727	4	Mushroom head square neck bolt (10 Stk.)		
90	G07926001	E08403	2	Disc (4 Stk.)		
91	G07846001	E01912	4	Self-locking hex nut (10 Stk.)		
92	G04722002	E10336	2	Hand wheel complete		
93	~~G47022006~~	~~E12722~~	2	~~Replaced by E13136~~		
93	G47080002	E13136	1	Bar tube set		
94	G47022004	E12710	1	Lower bar right		
95	G47022003	E12711	1	Lower bar left		
96	G47022005	E12714	1	Locking bolt		
97	G00002063	E10616	2	Draw spring		
98	G07838044	E05609	2	Hexagon screw (5 Stk.)		

AS 470 Universal 4T and AS 470 AS – ET documentation – Strut from serial No. 026515010001

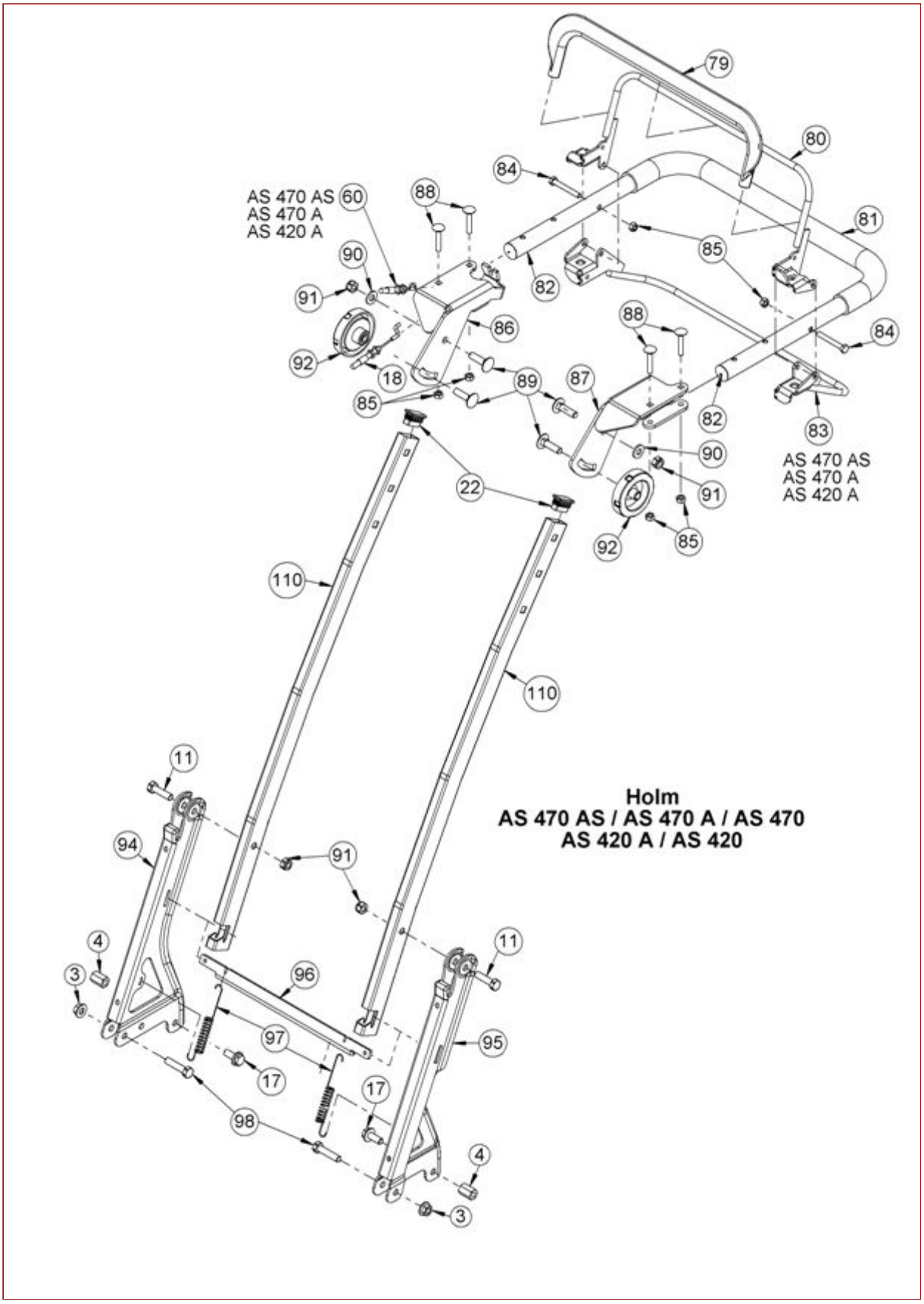

AS 470 Universal 4T and AS 470 AS – ET documentation – Strut from serial No. 026515010001

Pos	Art-Nr.	E-Nr.	Menge	Beschreibung	Modell	Info
3	G00007042	E06037	2	Selflocking nut with serrated bearing (3		
4	G00007061	E10018	2	Connection nut		
11	G07838031	E03951	2	Hexagon screw (5 Stk.)		
17	G00009108	E08177	2	Hexagon screw with serration (3 Stk.)		
18	G00020168	E11837	1	Engine brake cable		
22	G00029027	E12728	2	Lamella plugs (10 Stk.)		
60	G00020176	E12719	1	Drive cable		
79	G47022001	E12703	1	Cover for brake bar		
80	G47022010	E12717	1	Brake bar		
81	G47022021	E12726	1	Retaining bracket with soft tube		
82	G00029025	E11722	2	Lamella plugs (4 Stk.)		
83	G47022014	E12718	1	Drive bar		
84	G07837068	E07643	2	Hexagon screw (2 Stk.)		
85	G07906002	E06667	6	Self-locking hex nut (10 Stk.)		
86	G47022016	E12724	1	Bar holder right		
87	G47022015	E12725	1	Bar holder left		
88	G07827012	E05559	4	Mushroom head square neck bolt (2 Stk.)		
89	G07827024	E12727	4	Mushroom head square neck bolt (10 Stk.)		
90	G07926001	E08403	2	Disc (4 Stk.)		
91	G07846001	E01912	4	Self-locking hex nut (10 Stk.)		
92	G04722002	E10336	2	Hand wheel complete		
94	G47022004	E12710	1	Lower bar right		
95	G47022003	E12711	1	Lower bar left		
96	G47022005	E12714	1	Locking bolt		
97	G00002063	E10616	2	Draw spring		
98	G07838044	E05609	2	Hexagon screw (5 Stk.)		
110	G47022022	E13135	2	Bar tube		

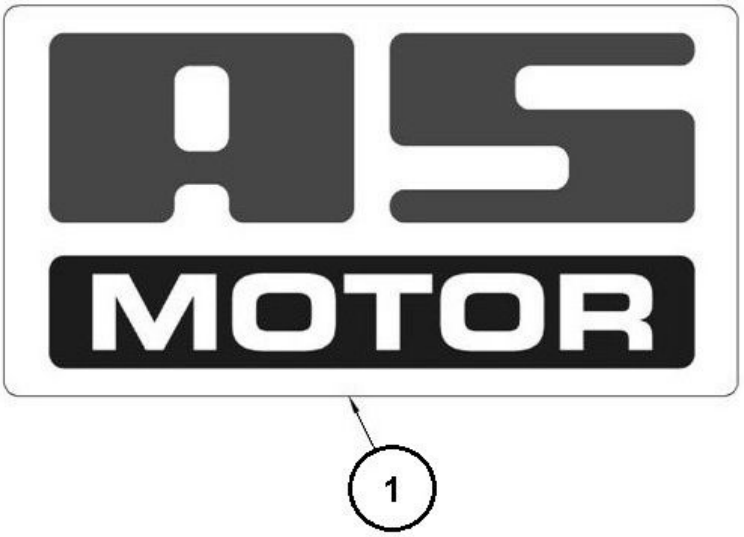

Pos.Nr.	ET-Nr.	Benennung
1	E12769	Aufkleber - Set AS 420 und 470

AS 420 4T and AS 420 SuperClip from serial No. 025613030001 – ET documentation – Instruction plate - set

Pos	Art-Nr.	E-Nr.	Menge	Beschreibung	Modell	Info
1	G47080001	E12769	1	Instruction plate - set AS 420 und 470		