Husqvarna

SPARE PARTS LIST

RIDERS

P525 D, 967292401, 2015

CHASSI – 3

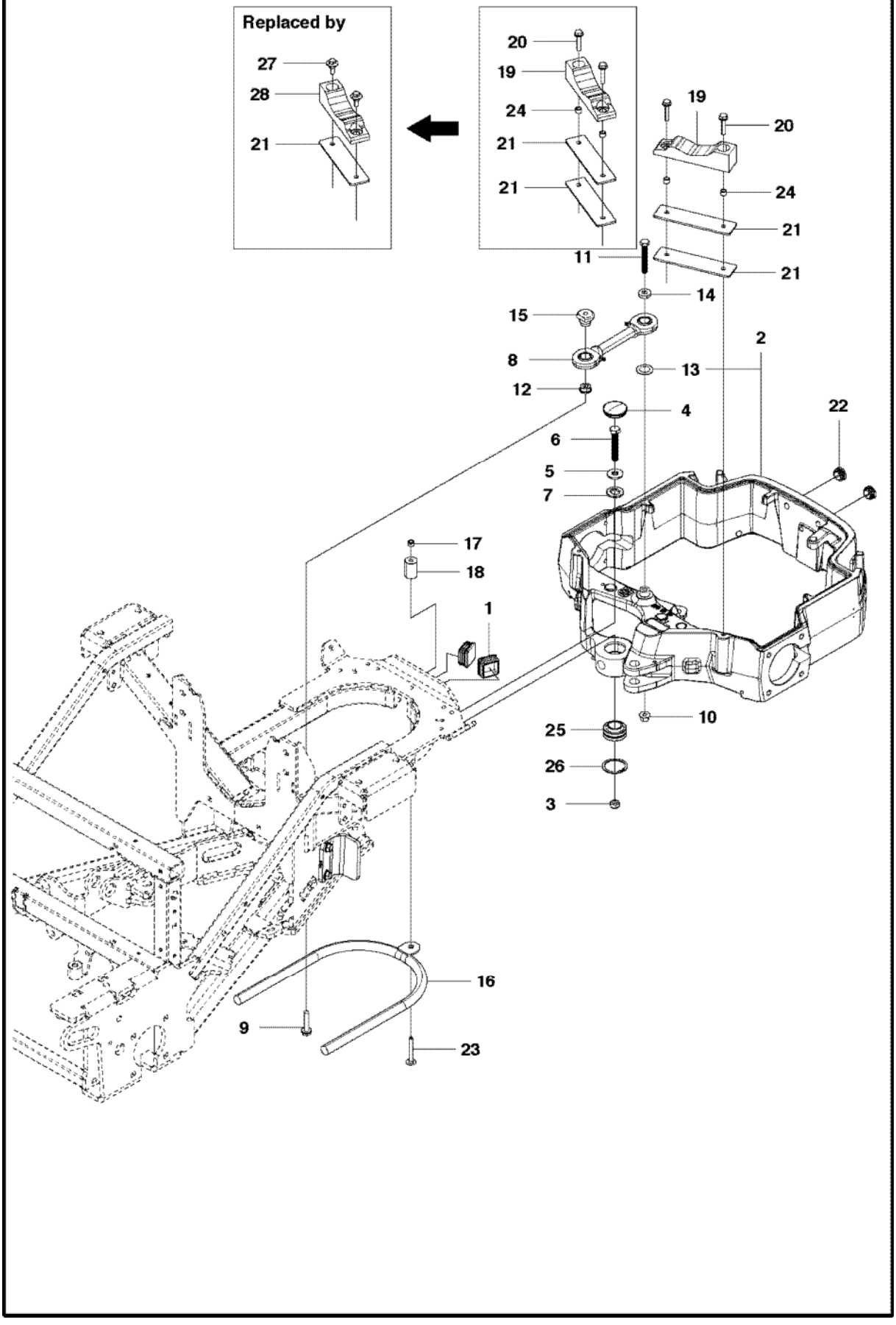
Replaced by
27
28
21
20
19
24
21
21
19
20
24
21
21
11
14
15
8
12
13
2
4
22
6
5
7
17
18
1
10
25
26
3
16
9
23

Ref	Part No	Description	Remark	QTY KIT
1	544 25 41-01	PLUG		2
2	584 63 07-01	REPAIR KIT		1
3	732 25 22-01	HEXAGON LOCKING NUT		1
4	581 82 83-01	DUST COVER		1
5	577 61 45-01	WASHER		1
6	576 65 48-07	SCREW EHHFM		1
7	577 61 46-01	FIXING WASHER		1
8	576 11 00-01	LINK RODS		1
9	580 70 36-01	SCREW EHHM		1
10	576 64 57-05	NUT FLANGE		1
11	577 37 67-01	SCREW EHHM		1
12	579 24 97-01	PIVOT		1
13	583 86 12-01	WASHER		1
14	578 24 64-01	SLEEVE		1
15	579 49 05-01	PIVOT		1
16	579 16 51-01	TUBE		1
17	732 21 18-01	LOCK NUT		1
18	579 41 60-01	SLEEVE		1
19	579 59 54-01	WEAR PLATE		2
20	506 57 01-06	SCREW EHHFM		4
21	576 47 42-01	PLATE		4
22	580 64 31-01	INSERT		2
23	535 42 38-03	SCREW RSQM		1
24	580 72 30-01	SLEEVE		1
25	576 27 17-01	BEARING		1
26	576 46 80-01	LOCK RING		1
27	544 36 24-01	SCREW		4
28	585 56 30-02	WEAR PLATE		2

CHASSI – 2

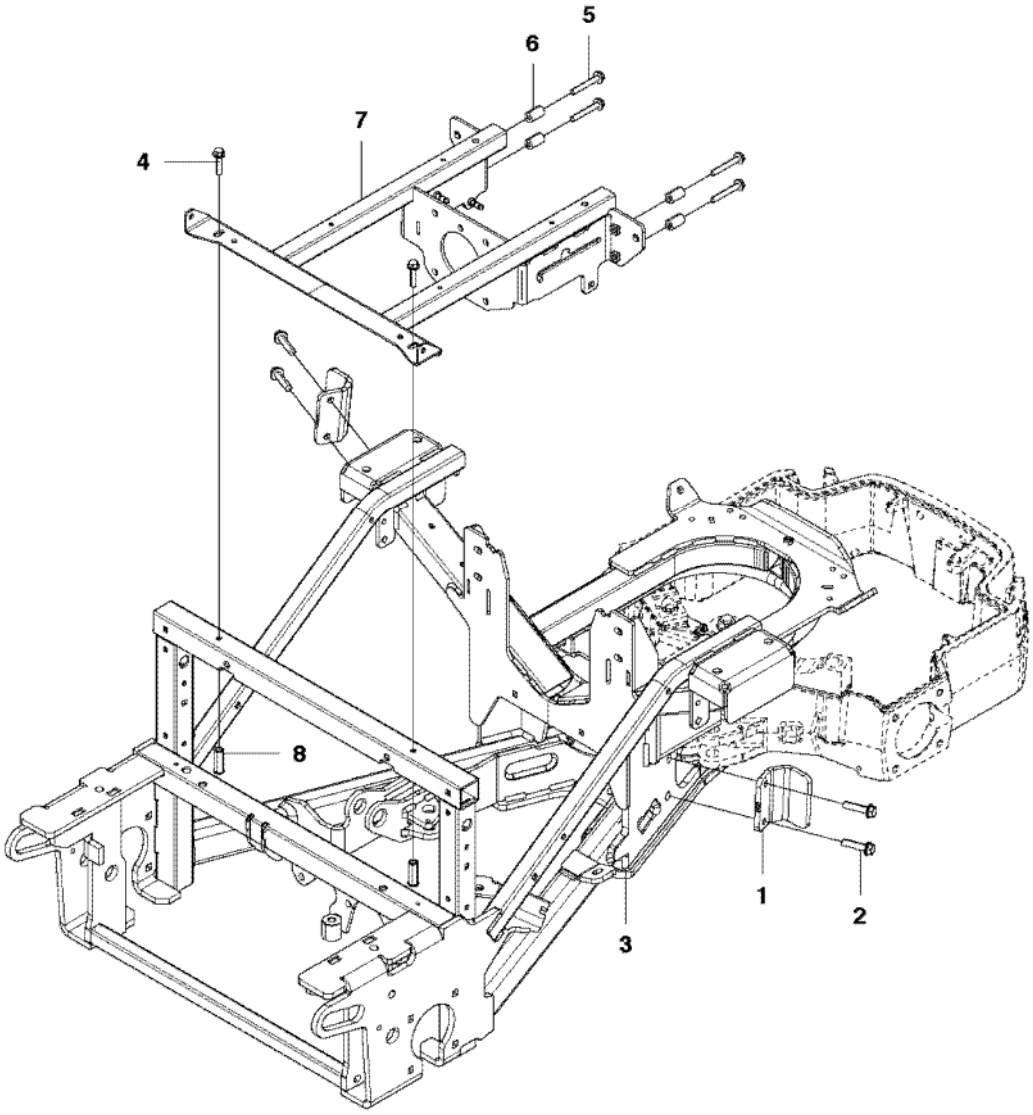

Ref	Part No	Description	Remark	QTY KIT
1	579 62 23-01	CONTACT PLATE		2
2	506 67 54-08	COLLAR SCREW		4
3	579 43 19-01	FRAME		1
4	506 57 01-06	SCREW EHHFM		2
5	506 57 01-07	SCREW EHHFM		4
6	506 99 20-01	PIPE		4
7	576 00 64-02	BRACKET		1
8	576 43 42-01	HEXAGON NUT		2

HYDRAULICS – 3

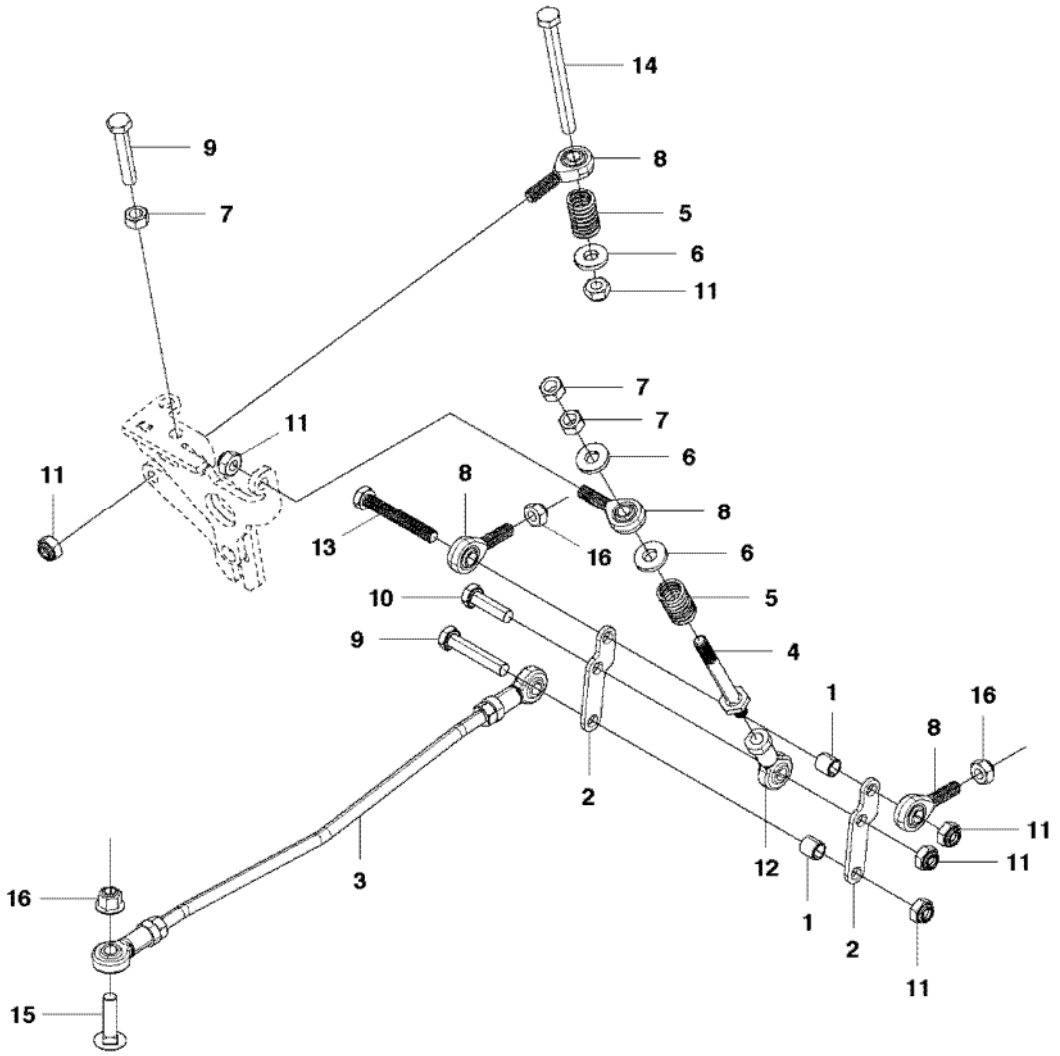

Ref	Part No	Description	Remark	QTY KIT
1	577 40 03-01	BUSHING		2
2	577 40 10-01	PLATE		2
3	577 38 86-01	PULL ROD		1
4	577 39 08-01	CONTROL SHAFT	NORMAL THREADS	1
4	585 44 84-01	CONTROL SHAFT	FINE THREADS	1
5	577 39 06-01	SPRING		2
6	576 82 31-01	WASHER		3
7	731 23 20-01	HEXAGON NUT	NORMAL THREADS	2
7	586 05 01-01	NUT	FINE THREADS	2
8	577 40 85-01	ROD END		4
9	725 25 02-71	SCREW EHHM		2
10	725 24 97-51	SCREW		1
11	732 21 20-51	NUT		6
12	506 95 17-01	ROD END		1
13	577 37 67-01	SCREW EHHM		1
14	725 25 13-51	SCREW EHHM		1
15	727 64 99-51	SCREW		1
16	576 64 57-05	NUT FLANGE		3

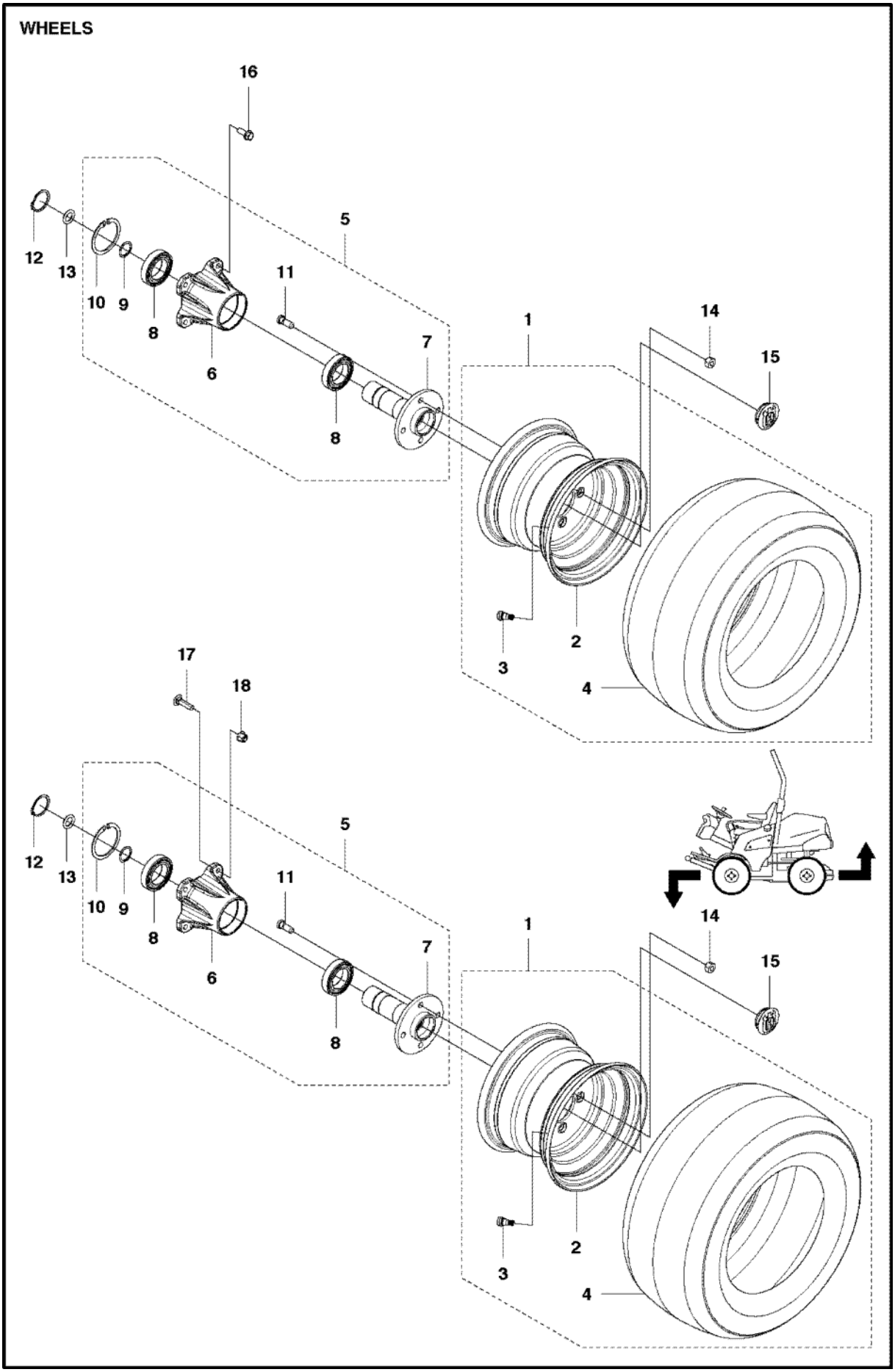
WHEELS
16
12
13
10
9
8
6
5
11
8
7
1
14
15
3
2
4
17
18
12
13
10
9
8
6
5
11
8
7
1
14
15
3
2
4

Ref	Part No	Description	Remark	QTY	KIT
1	580 76 93-01	WHEEL ASSY		4	
2	580 76 94-01	RIM		1	1
3	523 03 47-01	VALVE		1	1
4	579 73 26-01	TYRE		1	1
5	575 88 73-01	HUB		4	
6	575 88 75-01	BEARING HOUSING		1	5
7	575 88 76-01	SHAFT		1	5
8	738 21 09-04	BALL BEARING		2	5
9	576 12 77-01	LOCK RING		1	5
10	576 12 76-01	LOCK RING		1	5
11	506 89 02-01	BOLT		4	5
12	735 31 31-10	CIRCLIP		4	
13	576 12 78-01	O-RING		4	
14	506 86 50-01	WHEEL NUT		16	
15	506 86 48-01	PROTECTIVE COVER		4	
16	506 67 54-01	SCREW EHHFM		8	
17	727 64 99-51	SCREW		8	
18	576 64 57-05	NUT FLANGE		8	

LIFTING SYSTEM

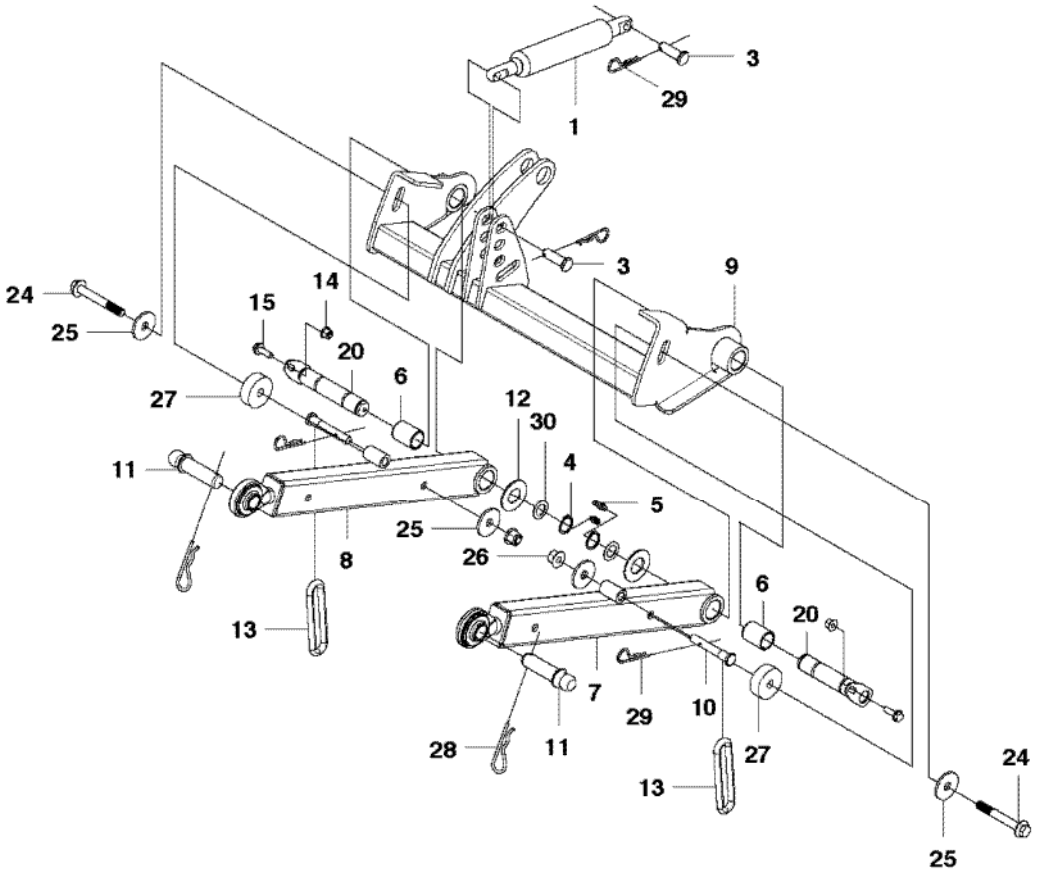

Ref	Part No	Description	Remark	QTY KIT
1	576 05 01-01	GAS SPRING		1
3	721 85 70-01	CLEVIS PIN		2
4	574 45 88-01	CIRCLIP		2
5	738 88 10-01	LUBRICATION NIPPLE		2
6	576 63 04-01	BUSHING		2
7	578 96 94-01	LIFTING ARM		1
8	578 96 94-02	LIFTING ARM		1
9	575 81 44-01	BEAM		1
10	504 88 76-01	COTTER		2
11	544 21 42-01	BOLT		2
12	506 94 58-01	WASHER		2
13	580 71 76-01	LINK	LINK	2
14	576 64 57-04	NUT FLANGE		2
15	506 57 01-05	SCREW EHHFM		2
20	576 59 79-02	SHAFT ASSY		2
24	576 65 48-09	SCREW EHHFM		2
25	544 25 32-01	WASHER		4
26	576 64 57-06	NUT FLANGE		2
27	576 62 56-01	WASHER		2
28	506 96 66-01	HAIR PIN COTTER		2
29	721 68 02-51	SPRING COTTER		4
30	506 50 48-06	WASHER		2

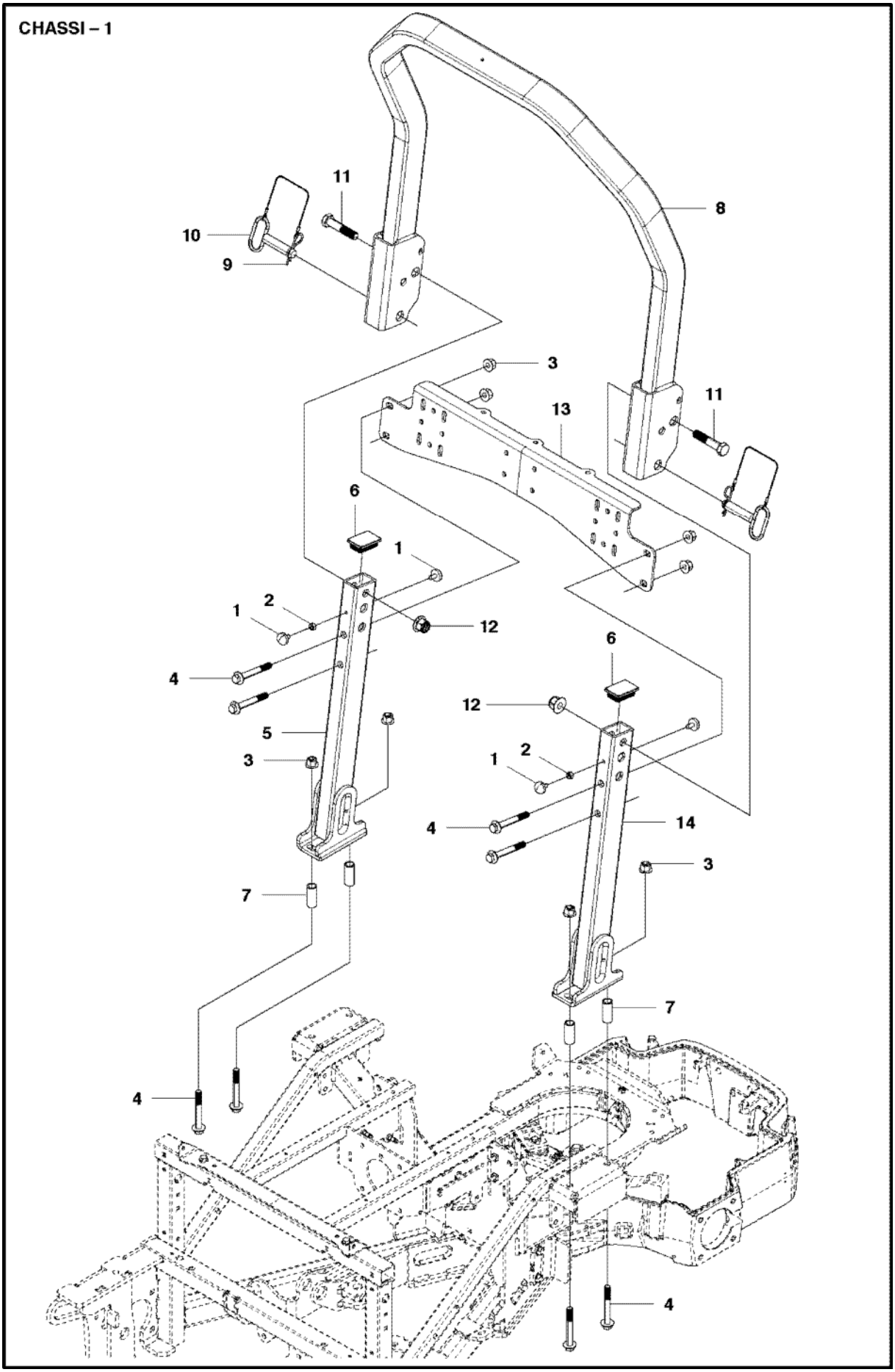
CHASSI – 1
11
10
9
8
3
13
11
6
1
1
2
12
4
5
3
6
12
1
2
4
14
3
7
7
4
4

Ref	Part No	Description	Remark	QTY KIT
1	501 97 66-01	ANTIVIBRATION ELEMENT		4
2	731 23 18-01	HEXAGON NUT		2
3	576 64 57-06	NUT FLANGE		8
4	576 65 48-09	SCREW EHHFM		8
5	576 12 38-02	ROPS		1
6	577 66 81-01	PLASTIC COVER		2
7	579 70 33-01	TUBE SLEEVE		4
8	576 12 28-01	ROPS		1
9	721 68 02-51	SPRING COTTER		2
10	574 38 80-01	PIN		2
11	577 41 16-01	SCREW EHHM		2
12	577 41 19-01	NUT FLANGE		2
13	577 40 61-01	STIFFENING PLATE		1
14	576 12 38-01	ROPS		1

ELECTRIC

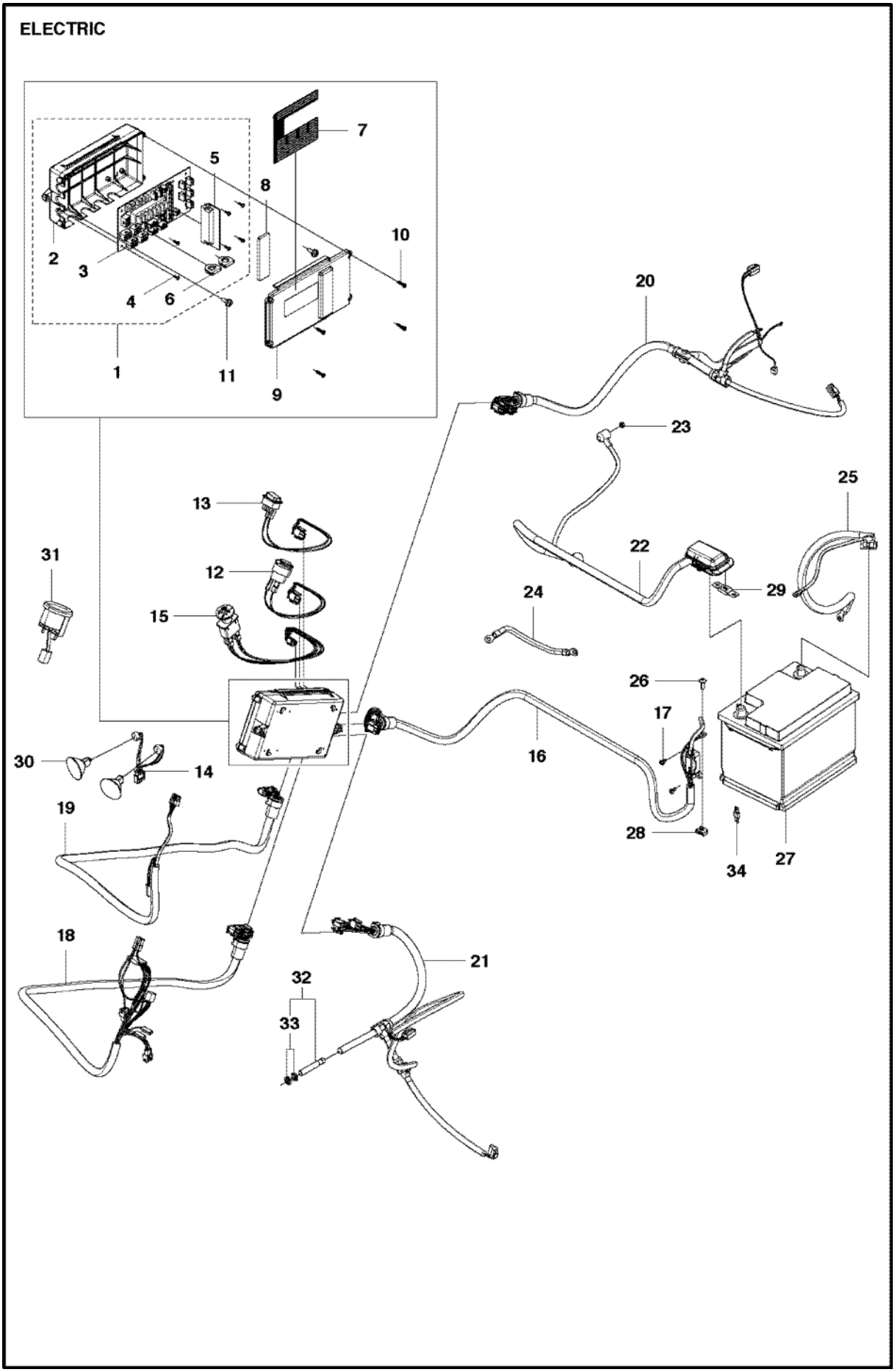
1
2
3
4
5
6
7
8
9
10
11
12
13
14
15
16
17
18
19
20
21
22
23
24
25
26
27
28
29
30
31
32
33
34

Ref	Part No	Description	Remark	QTY	KIT
1	579 54 65-01	ELECTRONIC BOX		1	
2	576 28 57-01	ELECTRIC BOX		1	1
3	579 29 38-01	CONTROL BOARD		1	1
4	535 13 03-10	SCREW ITXPANT		6	1
5	579 29 39-01	CONTROL UNIT		1	1
6	544 38 15-01	BUSHING		2	1
7	576 97 64-01	DECAL		1	
8	577 57 42-01	RUBBER		1	
9	576 28 58-01	LID		1	
10	577 90 34-01	SCREW CRPANT		4	
11	574 85 62-02	SCREW		2	
12	576 46 83-01	WIRING	12v Socket	1	
13	576 46 84-01	SWITCH		1	
14	576 46 85-01	WIRING		1	
15	576 46 86-01	SWITCH	PTO switch	1	
16	576 46 87-01	WIRING		1	
17	544 29 13-02	SCREW ITXPANM		2	
18	576 46 88-01	WIRING		1	
19	576 46 89-01	WIRING		1	
20	579 05 88-01	WIRING		1	
21	576 46 91-01	WIRING		1	
22	576 47 20-01	WIRING		1	
23	732 21 16-01	LOCK NUT		1	
24	544 32 37-01	GROUND CABLE		1	
25	577 43 20-01	WIRING		1	
26	535 42 58-02	SCREW IHPANM		1	
27	576 95 82-01	BATTERY		1	
28	535 42 91-01	SPRING NUT		1	
29	544 36 96-01	FUSE	125A	1	
30	535 44 68-01	LAMP		2	
31	576 95 53-01	GAUGE	Temp	1	
32	522 61 25-01	SENSOR		1	
33	522 61 76-01	NUT		1	32
34	501 96 55-01	FUSE	50A	1	

FUEL SYSTEM

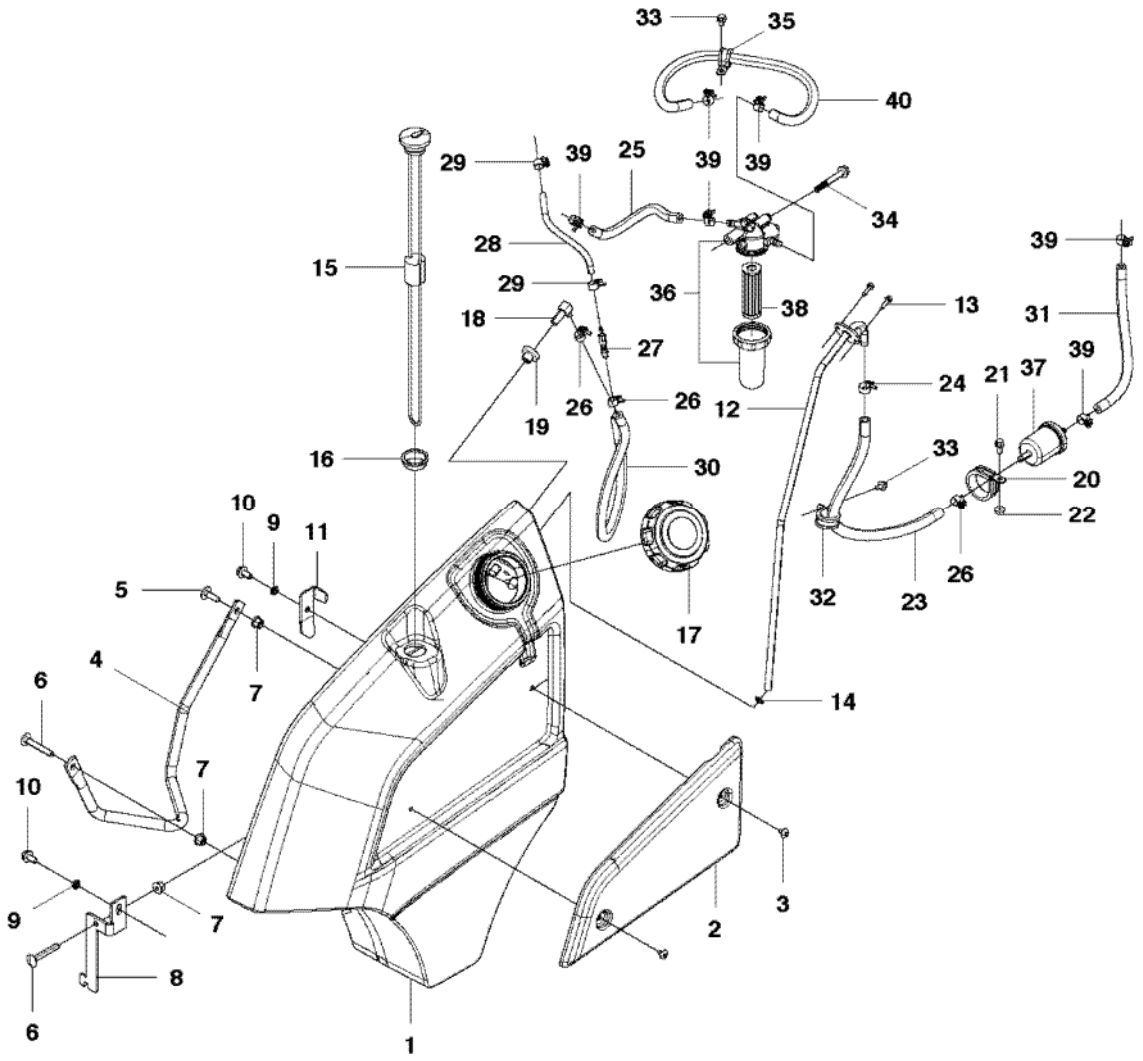
33
35
40
29
39
25
39
39
34
28
15
29
36
38
13
39
31
18
27
24
21
37
39
19
26
26
12
16
30
33
20
22
10
9
11
5
17
32
23
26
4
7
14
6
7
10
3
9
7
2
8
6
1

Ref	Part No	Description	Remark	QTY KIT
1	575 71 87-01	FUEL TANK		1
2	576 14 28-01	COVER		1
3	535 42 58-01	SCREW IHPANM		2
4	579 57 01-01	TUBE		1
5	535 42 38-01	SCREW RSQM		1
6	535 42 38-02	SCREW RSQM		2
7	576 64 57-04	NUT FLANGE		3
8	576 05 59-01	BRACKET		1
9	503 23 04-03	WASHER		2
10	506 57 01-03	SCREW EHHFM		2
11	576 12 02-01	BRACKET		1
12	576 48 12-01	CONNECTOR		1
13	535 41 56-19	SCREW		2
14	740 48 12-02	O-RING		1
15	575 96 14-01	GAUGE		1
16	576 48 36-01	GROMMET		1
17	539 10 63-30	TANK CAP		1
18	539 10 52-44	JOINT		1
19	539 10 52-45	GROMMET		1
20	574 53 12-02	HOSE CLAMP		1
21	725 23 68-61	SCREW EHHFT		1
22	576 64 57-03	NUT FLANGE		1
23	544 28 25-10	FUEL HOSE		1
24	544 28 26-03	HOSE CLAMP		1
25	585 51 05-01	FUEL HOSE		1
26	544 28 26-01	HOSE CLAMP		3
27	544 36 92-01	CONNECTION		1
28	544 28 25-05	FUEL HOSE		1
29	544 28 26-02	HOSE CLAMP		2
30	544 28 25-13	FUEL HOSE		2
31	585 51 05-02	FUEL HOSE		1
32	574 53 12-01	HOSE CLAMP		1
33	725 23 64-61	SCREW EHHFT		2
34	506 57 01-08	SCREW EHHFM		1
35	574 53 12-03	HOSE CLAMP		1
36	576 95 57-01	FUEL FILTER		1
37	576 95 55-01	PREFILTER		1
38	578 01 01-01	FILTER		1
39	544 28 26-05	HOSE CLAMP		6
40	585 51 05-04	FUEL HOSE		1

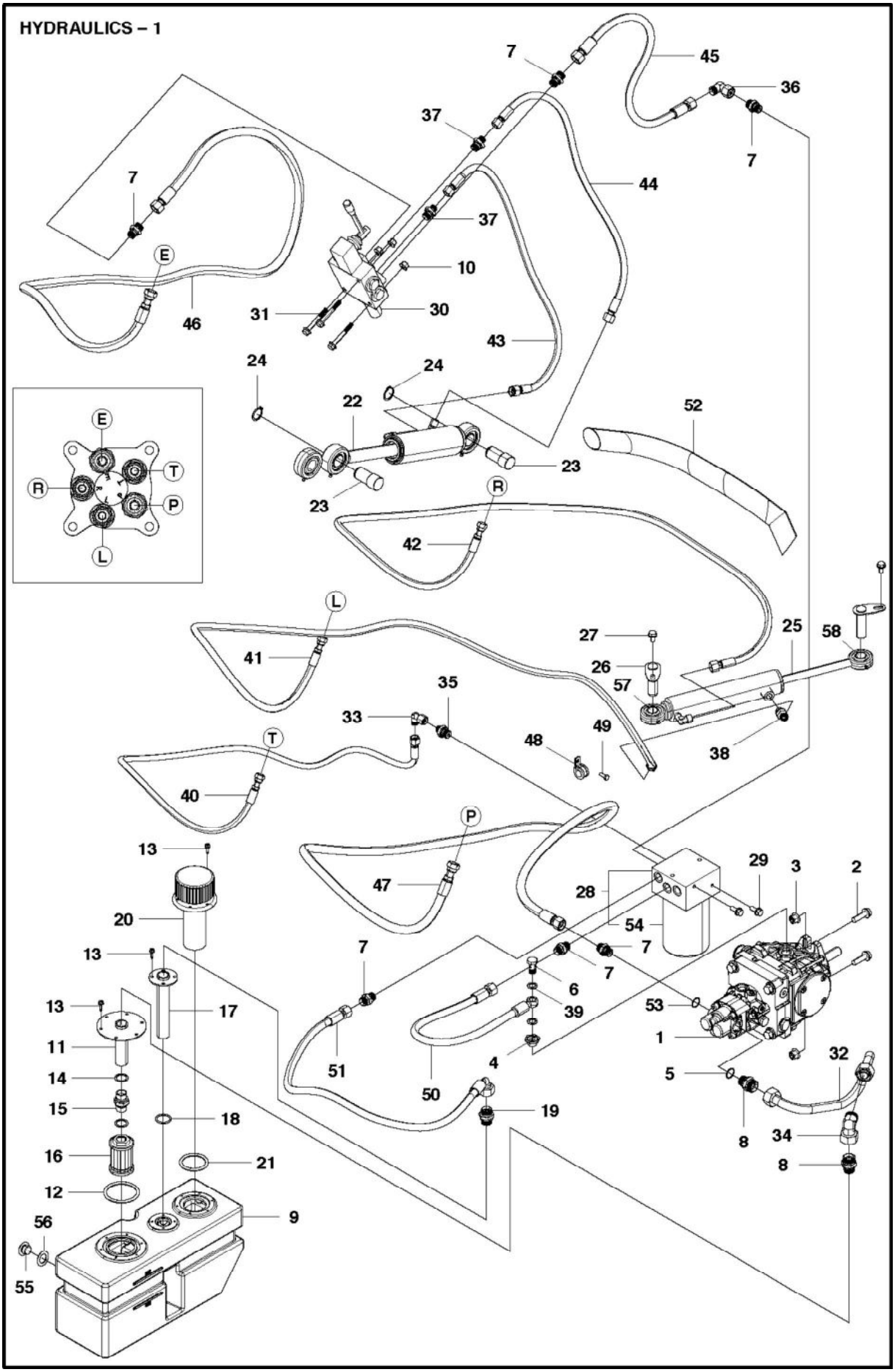
HYDRAULICS – 1
7
45
36
37
7
7
44
37
E
10
46
31
30
43
24
24
22
52
E
T
R
P
L
23
23
R
42
L
41
27
25
58
26
57
35
33
38
49
48
T
40
P
47
13
29
3
2
20
28
54
13
7
7
7
6
13
17
39
53
11
1
14
4
32
5
15
51
50
19
18
8
34
16
21
8
12
9
56
55

Ref	Part No	Description	Remark	QTY	KIT
1	579 40 88-01	HYDRAULIC PUMP		1	
2	506 67 54-08	COLLAR SCREW		2	
3	576 64 57-05	NUT FLANGE		3	
4	575 88 65-01	PIPE FITTING		1	
5	740 42 17-00	O-RING		1	
6	575 88 64-01	BOLT		1	
7	575 88 13-04	CONNECTOR		6	
8	575 88 13-01	CONNECTOR		2	
9	576 95 96-01	HYDRAULIC TANK ASSY		1	
10	576 64 57-04	NUT FLANGE		3	
11	575 87 08-01	PIPE		1	
12	544 04 65-05	O-RING		1	
13	535 41 56-19	SCREW		16	
14	544 01 00-01	GASKET		2	
15	544 00 97-01	PIPE FITTING		1	
16	544 00 19-01	FILTER		1	
17	575 87 09-01	PIPE		1	
18	544 04 65-06	O-RING		1	
19	575 88 13-03	CONNECTOR		1	
20	544 17 64-01	TANK CAP		1	
21	544 04 65-03	O-RING		1	
22	579 43 81-01	HYDRAULIC CYLINDER		1	
23	576 30 85-01	COTTER		2	
24	735 31 26-00	CIRCLIP		2	
25	579 44 14-01	HYDRAULIC CYLINDER		1	
26	576 28 64-01	SHAFT ASSY		2	
27	506 57 01-03	SCREW EHHFM		2	
28	588 13 00-01	FILTER UNIT		1	
29	506 57 01-04	SCREW EHHFM		2	
30	575 88 66-01	VALVE		1	
31	506 57 01-08	SCREW EHHFM		3	
32	579 27 00-01	HYDRAULIC PIPE		1	
33	575 88 15-01	CONNECTOR		1	
34	575 88 15-02	CONNECTOR		1	
35	575 88 13-02	CONNECTOR		2	
36	575 88 15-03	CONNECTOR		1	
37	576 44 40-01	PIPE FITTING		1	
38	579 73 76-01	PIPE FITTING		1	
39	544 01 00-04	GASKET		2	
40	575 87 50-02	HYDRAULIC HOSE		1	
41	575 87 52-01	HYDRAULIC HOSE		1	
42	575 87 53-02	HYDRAULIC HOSE		1	
43	575 87 56-01	HYDRAULIC HOSE		1	
44	575 87 55-01	HYDRAULIC HOSE		1	
45	575 87 58-01	HYDRAULIC HOSE		1	
46	575 87 54-01	HYDRAULIC HOSE		1	
47	575 87 51-01	HYDRAULIC HOSE		1	
48	574 53 12-03	HOSE CLAMP		1	
49	725 23 64-61	SCREW EHHFT		1	
50	575 87 47-01	HYDRAULIC HOSE		1	
51	576 63 21-02	HYDRAULIC HOSE		1	
52	505 45 38-04	HOSE GUARD		1	
53	740 42 13-00	O-RING		1	
54	588 15 59-01	FILTER		1	28
55	522 47 12-01	OIL PLUG		1	
56	522 47 13-01	WASHER		1	
57	586 97 85-01	BEARING		1	
58	595 87 85-01	SERVICE KIT	Bearing and circlip	1	

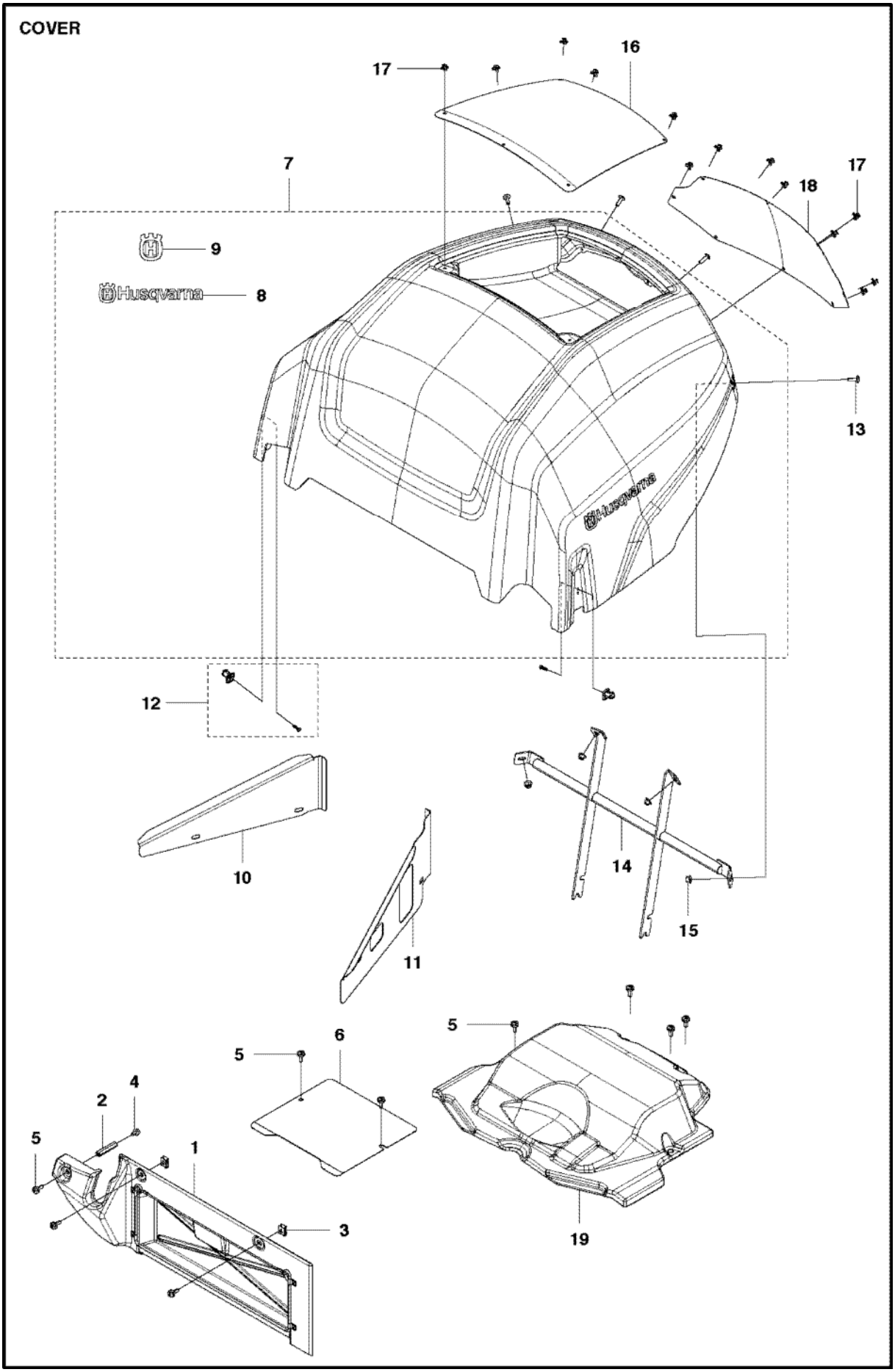
COVER
17
16
7
17
18
9
8
13
12
10
14
15
11
5
6
5
5
4
2
1
5
3
19

Ref	Part No	Description	Remark	QTY	KIT
1	579 63 72-01	COVER KIT		1	
2	576 68 61-03	HEXAGON NUT		1	
3	535 42 91-01	SPRING NUT		6	
4	725 23 64-61	SCREW EHHFT		1	
5	574 85 62-02	SCREW		13	
6	576 77 59-01	SHEET		1	
7	581 87 86-01	ENGINE HOOD		1	
8	577 46 90-01	DECAL		2	7
9	574 38 21-01	DECAL		2	7
10	586 33 20-01	COVER PLATE		1	
11	586 33 19-01	COVER PLATE		1	
12	577 22 97-01	KEEPER		2	
13	535 42 58-02	SCREW IHPANM		4	
14	576 23 75-01	HINGE		1	
15	576 64 57-03	NUT FLANGE		4	
16	581 74 71-01	NET		1	
17	577 01 39-01	RIVET		13	
18	581 74 74-01	NET		1	
19	585 06 77-01	COVER		1	

HYDRAULICS – 2

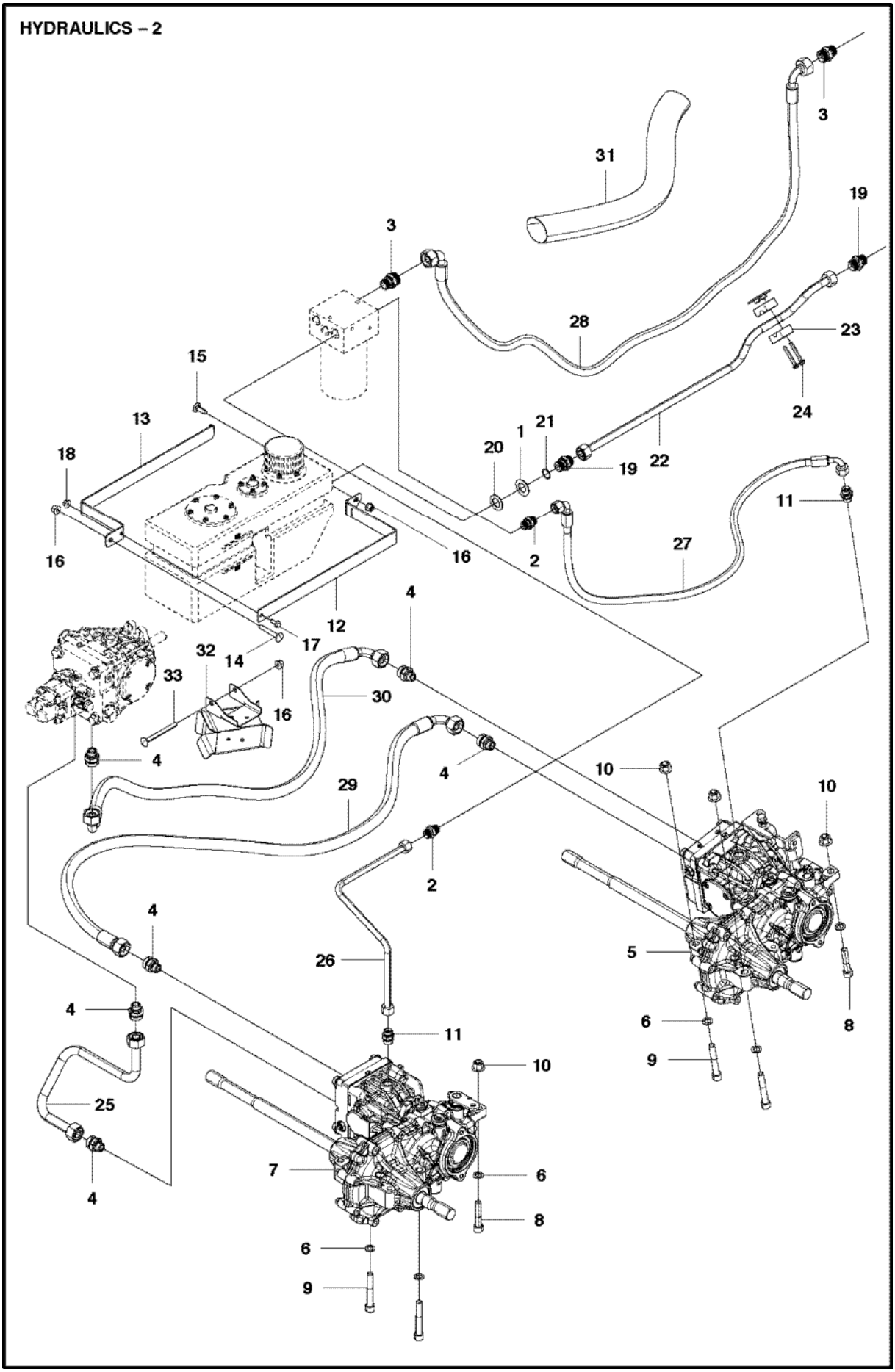

Ref	Part No	Description	Remark	QTY KIT
1	506 77 57-01	WASHER		1
2	575 88 13-04	CONNECTOR		2
3	575 88 13-01	CONNECTOR		2
4	575 88 14-01	CONNECTOR		6
5	579 40 89-01	TRANSMISSION		1
6	734 11 77-71	WASHER		6
7	579 40 90-01	TRANSMISSION		1
8	544 25 63-03	SCREW IHSCM		4
9	544 25 63-01	SCREW IHSCM		2
10	576 64 57-06	NUT FLANGE		4
11	575 88 14-02	CONNECTOR		2
12	575 87 12-01	BRACKET		1
13	575 87 13-01	BRACKET		1
14	535 42 38-02	SCREW RSQM		1
15	535 42 38-01	SCREW RSQM		1
16	576 64 57-04	NUT FLANGE		3
17	725 23 68-51	SCREW		1
18	576 64 57-03	NUT FLANGE		1
19	575 88 13-03	CONNECTOR		2
20	522 47 13-01	WASHER		1
21	740 42 17-00	O-RING		1
22	579 70 68-01	HYDRAULIC PIPE		1
23	579 73 61-01	PIPE CLAMP		1
24	535 47 52-45	SCREW EHHFM		2
25	587 44 46-01	HYDRAULIC HOSE		1
26	575 87 59-01	HYDRAULIC PIPE		1
27	575 87 46-02	HYDRAULIC HOSE		1
28	575 87 48-02	HYDRAULIC HOSE		1
29	575 87 44-01	HYDRAULIC HOSE		1
30	575 87 45-02	HYDRAULIC HOSE		1
31	505 45 38-02	HOSE GUARD		1
32	579 58 25-02	TUBE		1
33	727 64 69-51	SCREW RSQM		1

SEAT

Not Shown: 579 67 74-01 Seat Switch

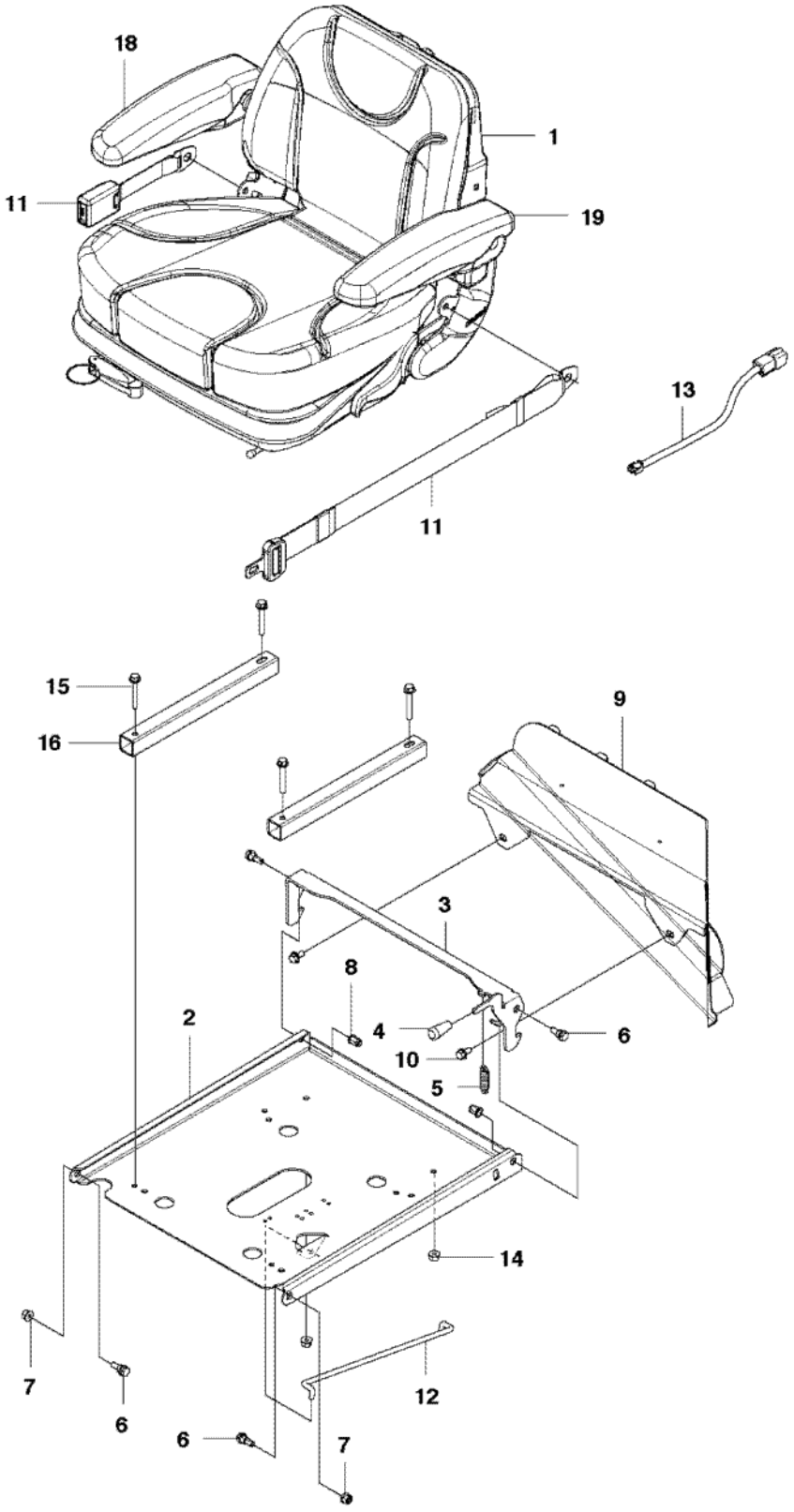

Ref	Part No	Description	Remark	QTY KIT
1	588 61 20-01	SEAT ASSY		1
2	575 88 33-01	SHEET		1
3	575 88 34-01	LATCH		1
4	535 43 82-01	KNOB		1
5	544 21 81-03	DRAW SPRING		1
6	506 59 74-01	SCREW EHHFM		4
7	576 64 57-04	NUT FLANGE		2
8	506 91 62-01	NUT		2
9	576 54 30-01	BRACKET		1
10	506 57 01-03	SCREW EHHFM		2
11	544 91 43-01	SAFETY BELT		1
12	575 88 35-01	STAY		1
13	579 47 38-01	WIRING		1
14	576 64 57-04	NUT FLANGE		4
15	506 57 01-07	SCREW EHHFM		4
16	588 61 23-01	DISTANCE		2
17	579 67 74-01	MICRO SWITCH	NOT SHOWN	1
18	582 31 02-01	ARM REST		1
19	582 31 04-01	ARM REST		1

CLUTCH

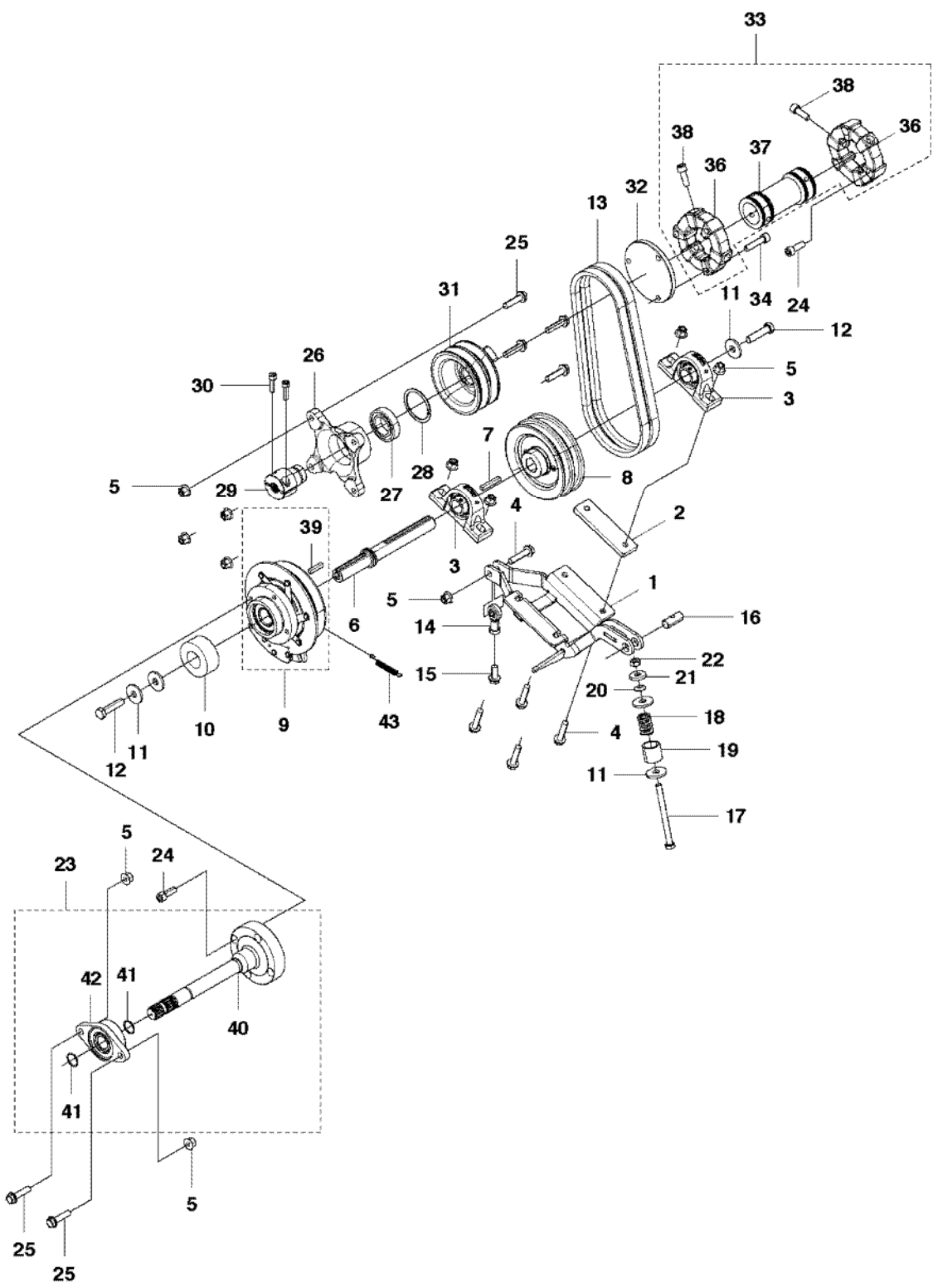
33
38
36
38
37
36
32
13
25
31
11
34
24
12
26
5
30
3
7
28
8
5
29
27
4
2
39
3
1
5
16
6
14
22
15
21
20
18
10
9
43
4
19
11
12
11
17
5
23
24
42
41
40
41
5
25
25

Ref	Part No	Description	Remark	QTY KIT
1	576 18 60-01	BEARING CAGE		1
2	510 14 60-01	DISTANCE		1
3	506 04 36-01	BEARING UNIT		2
4	506 67 54-03	SCREW EHHFM		5
5	576 64 57-05	NUT FLANGE		11
6	579 29 62-01	SHAFT		1
7	504 81 35-01	WEDGE		1
8	585 99 93-01	PULLEY ASSY		1
9	586 94 37-01	CLUTCH		1
10	589 52 39-01	BEARING	CLUTCH	1
11	535 42 92-01	WASHER		5
12	725 25 42-85	SCREW		2
13	589 53 95-01	BELT		1
14	506 95 17-01	ROD END		1
15	506 67 54-01	SCREW EHHFM		1
16	510 16 76-01	PEN		1
17	725 25 15-71	SCREW EHHM		1
18	510 17 07-01	SPRING		1
19	522 94 69-01	SLEEVE		1
20	576 47 35-02	WASHER		1
21	576 47 35-03	WASHER		1
22	731 23 20-51	HEXAGON NUT		1
23	576 99 38-01	SHAFT ASSY		1
24	502 23 36-01	SCREW IHSCM		4
25	506 67 54-02	SCREW EHHFM		6
26	506 04 32-01	BEARING BOX		1
27	522 66 44-01	BALL BEARING		1
28	522 66 43-01	CIRCLIP		1
29	506 04 34-01	SHAFT		1
30	725 54 55-01	SCREW IHSCM		2
31	505 02 04-01	PULLEY		1
32	515 98 35-01	SPACER		1
33	515 98 32-02	CLUTCH ASSY		1
34	502 23 36-02	SCREW IHSCM		3
36	515 98 34-01	RUBBER RING		2
37	515 98 33-02	SHAFT		1
38	725 54 95-01	SCREW IHSCM		6
39	580 28 45-01	PARALLEL KEY		1
40	576 18 87-01	SHAFT ASSY		1
41	576 47 36-01	CLIP		2
42	544 19 10-01	BEARING UNIT		1
43	506 83 43-01	SPRING		1

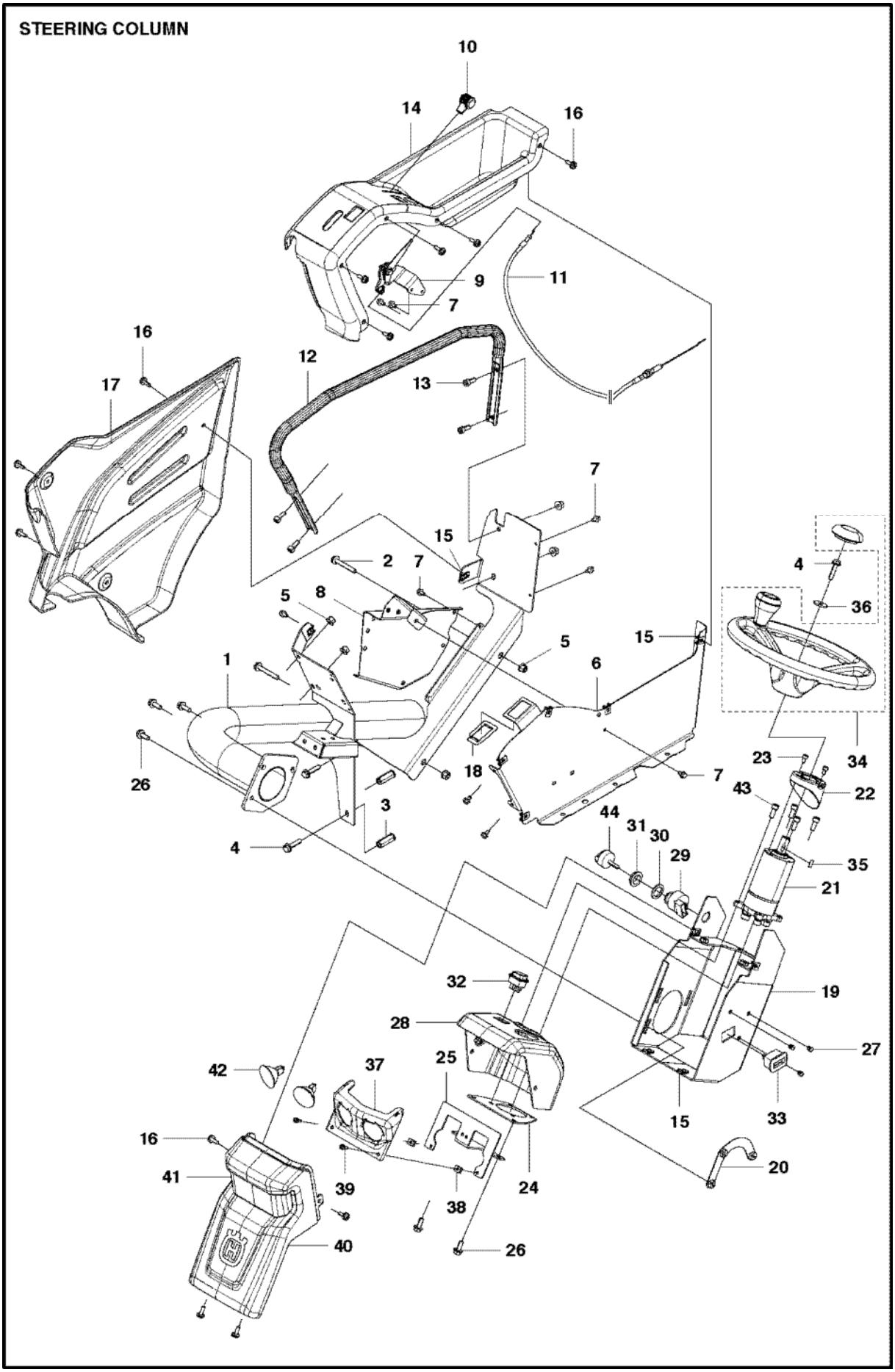
STEERING COLUMN
10
14
16
9
11
7
16
17
12
13
7
15
2
7
5
8
5
15
1
6
26
18
7
23
34
4
36
43
22
3
44
31
30
29
35
4
21
32
19
28
27
42
37
25
15
33
16
41
39
38
24
20
40
26

Ref	Part No	Description	Remark	QTY KIT
1	579 61 34-01	CONSOLE		1
2	506 57 01-07	SCREW EHHFM		2
3	576 43 42-01	HEXAGON NUT		2
4	506 57 01-06	SCREW EHHFM		3
5	576 64 57-04	NUT FLANGE		6
6	575 88 28-01	PANEL		1
7	725 23 64-61	SCREW EHHFT		9
8	576 25 62-01	BRACKET		1
9	576 80 68-01	THROTTLE CONTROL		1
10	506 88 91-01	KNOB		1
11	576 65 65-01	WIRE		1
12	575 88 29-01	HANDLE		1
13	725 54 51-01	SCREW IHSCM		4
14	577 48 80-01	PANEL		1
15	535 42 91-01	SPRING NUT		12
16	574 85 62-02	SCREW		12
17	575 88 36-01	COVER		1
18	544 40 43-01	LOCKWASHER		1
19	576 54 51-01	BRACKET		1
20	576 44 43-01	SHEET		1
21	506 06 81-01	POWER STEERING		1
22	578 79 08-01	COVER		1
23	725 53 64-01	SCREW IHSCM		2
24	576 54 50-01	BRACKET		1
25	576 02 17-01	BRACKET		1
26	506 57 01-04	SCREW EHHFM		5
27	580 27 29-01	INSERT		3
28	577 21 86-01	COVER		1
29	504 85 17-01	KEY SWITCH		1
30	535 47 50-01	WASHER		1
31	535 47 61-01	NUT		1
32	502 65 57-01	SWITCH		1
33	577 09 27-01	HOUR METER		1
34	544 29 14-01	STEERING WHEEL		1
35	735 88 12-00	WOODRUFF KEY		1
36	544 22 16-01	WASHER		1
37	535 46 42-01	LAMP BODY ASSY		1
38	506 89 20-01	SPEED NUT		2
39	535 41 56-19	SCREW		2
40	576 39 23-01	COVER		1
41	576 23 11-01	COVER		1
42	535 44 68-01	LAMP		2
43	725 54 49-01	SCREW IHSCM		4
44	535 47 60-01	IGNITION KEY		1

DECALS

1

2

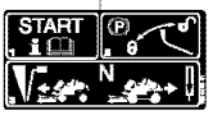

3

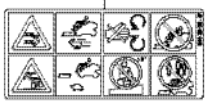

4

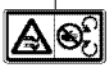

5

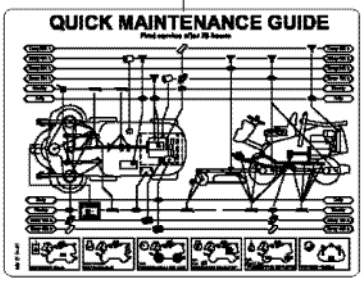

6

8

9

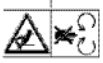

11

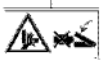

12

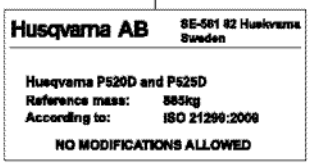

13

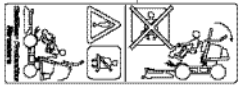

10

14

Ref	Part No	Description	Remark	QTY KIT
1	581 78 40-11	LABEL		1
2	506 58 45-01	LABEL		1
3	522 44 63-01	LABEL		1
4	544 39 16-01	LABEL WARNING		1
5	574 51 00-01	DECAL		2
6	587 11 14-01	DECAL		1
8	576 97 60-01	DECAL		1
9	505 51 66-01	LABEL		1
10	521 93 90-01	LABEL		1
11	580 71 28-01	LABEL		1
12	580 71 29-01	LABEL		2
13	580 76 44-01	LABEL		1
14	579 55 81-01	DECAL		2

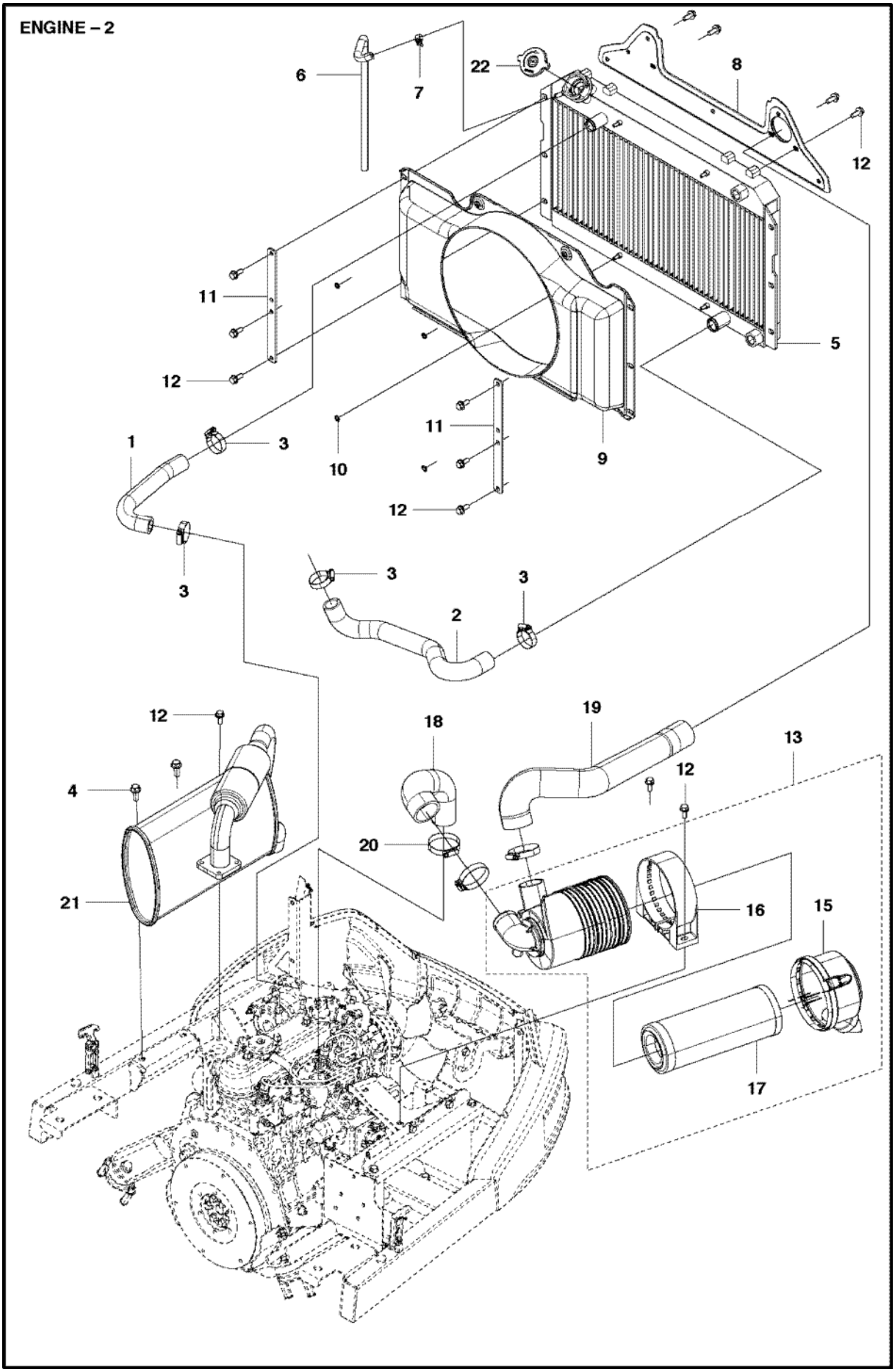
ENGINE – 2
6
7
22
8
12
11
12
5
1
3
10
11
9
12
3
3
3
3
2
12
4
18
19
13
12
20
21
16
15
17

Ref	Part No	Description	Remark	QTY	KIT
1	578 93 60-01	HOSE		1	
2	578 93 61-01	HOSE		1	
3	544 20 27-02	HOSE CLAMP		4	
4	506 67 54-01	SCREW EHHFM		2	
5	579 41 63-01	COOLER		1	
6	544 28 25-06	FUEL HOSE		1	
7	544 28 26-01	HOSE CLAMP		1	
8	579 58 20-01	WALL		1	
9	578 93 62-01	SHROUD		1	
10	506 96 36-01	WASHER		4	
11	577 80 78-01	PLATE		2	
12	506 57 01-04	SCREW EHHFM		16	
13	579 15 63-01	AIR CLEANER		1	
15	579 15 65-01	AIR CLEANER		1	13
16	579 15 66-01	AIR CLEANER		1	13
17	579 15 67-01	AIR CLEANER		1	13
18	578 93 58-01	HOSE		1	
19	578 93 59-01	HOSE		1	
20	544 20 27-03	HOSE CLAMP		3	
21	579 15 01-01	MUFFLER		1	
22	577 09 35-01	HUB CAP		1	

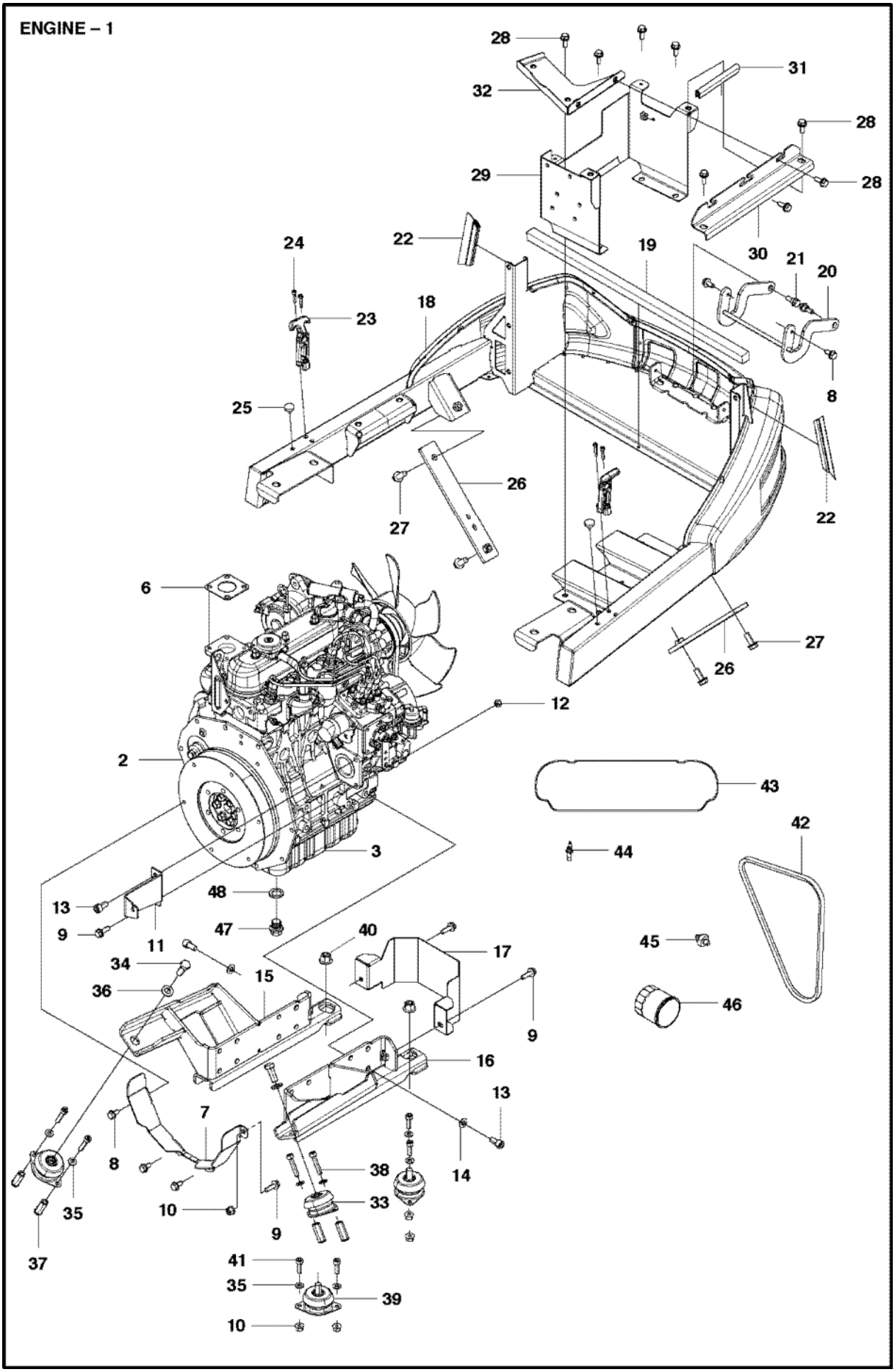
ENGINE – 1
28
31
32
28
29
28
24
22
19
30
21
20
23
18
8
25
26
22
27
6
27
26
12
2
43
42
3
44
48
13
47
9
11
40
17
45
34
15
36
46
9
16
13
7
8
38
14
35
10
33
9
37
41
35
39
10

Ref	Part No	Description	Remark	QTY KIT
2	579 54 36-01	ENGINE		1
3	501 08 16-01	ENGINE	Only the oil pan	1
6	576 97 25-01	GASKET		1
7	579 57 81-01	PROTECTIVE PLATE		1
8	506 57 01-03	SCREW EHHFM		5
9	506 57 01-05	SCREW EHHFM		4
10	576 64 57-04	NUT FLANGE		5
11	578 93 53-01	BRACKET		1
12	732 21 18-01	LOCK NUT		1
13	576 42 67-01	SCREW IHSCM		17
14	734 11 72-01	WASHER		16
15	578 27 02-01	BRACKET		1
16	578 27 02-02	BRACKET		1
17	579 40 58-01	COVER		1
18	575 74 99-01	ENGINE FRAME		1
19	576 99 04-04	GASKET		1
20	576 46 45-01	HINGE		1
21	506 59 74-01	SCREW EHHFM		2
22	576 64 05-01	SEALING STRIP		2
23	576 43 33-01	LATCH		2
24	725 53 33-65	SCREW IHSCM		4
25	579 48 85-01	ANTIVIBRATION ELEMENT		2
26	579 16 13-01	STAY		2
27	506 67 54-01	SCREW EHHFM		4
28	506 57 01-04	SCREW EHHFM		8
29	578 92 17-01	SUPPORT		1
30	578 92 12-01	BRACKET		1
31	578 31 03-02	SEALING STRIP		1
32	578 92 14-01	PLATE		1
33	587 44 83-01	ANTIVIBRATION ELEMENT		2
34	725 25 36-71	SCREW EHHM		2
35	734 11 64-01	WASHER		8
36	734 11 78-01	WASHER		2
37	576 43 42-01	HEXAGON NUT		4
38	725 54 59-01	SCREW IHSCM		4
39	578 18 36-01	ANTIVIBRATION ELEMENT		2
40	576 64 57-06	NUT FLANGE		2
41	725 54 53-01	SCREW IHSCM		4
42	578 00 99-02	BELT		1
43	578 00 97-02	GASKET		1
44	578 01 02-01	SENSOR		1
45	578 01 03-01	SWITCH		1
46	578 00 98-02	OIL FILTER		1
47	578 00 95-02	PLUG		1
48	578 00 96-02	GASKET		1

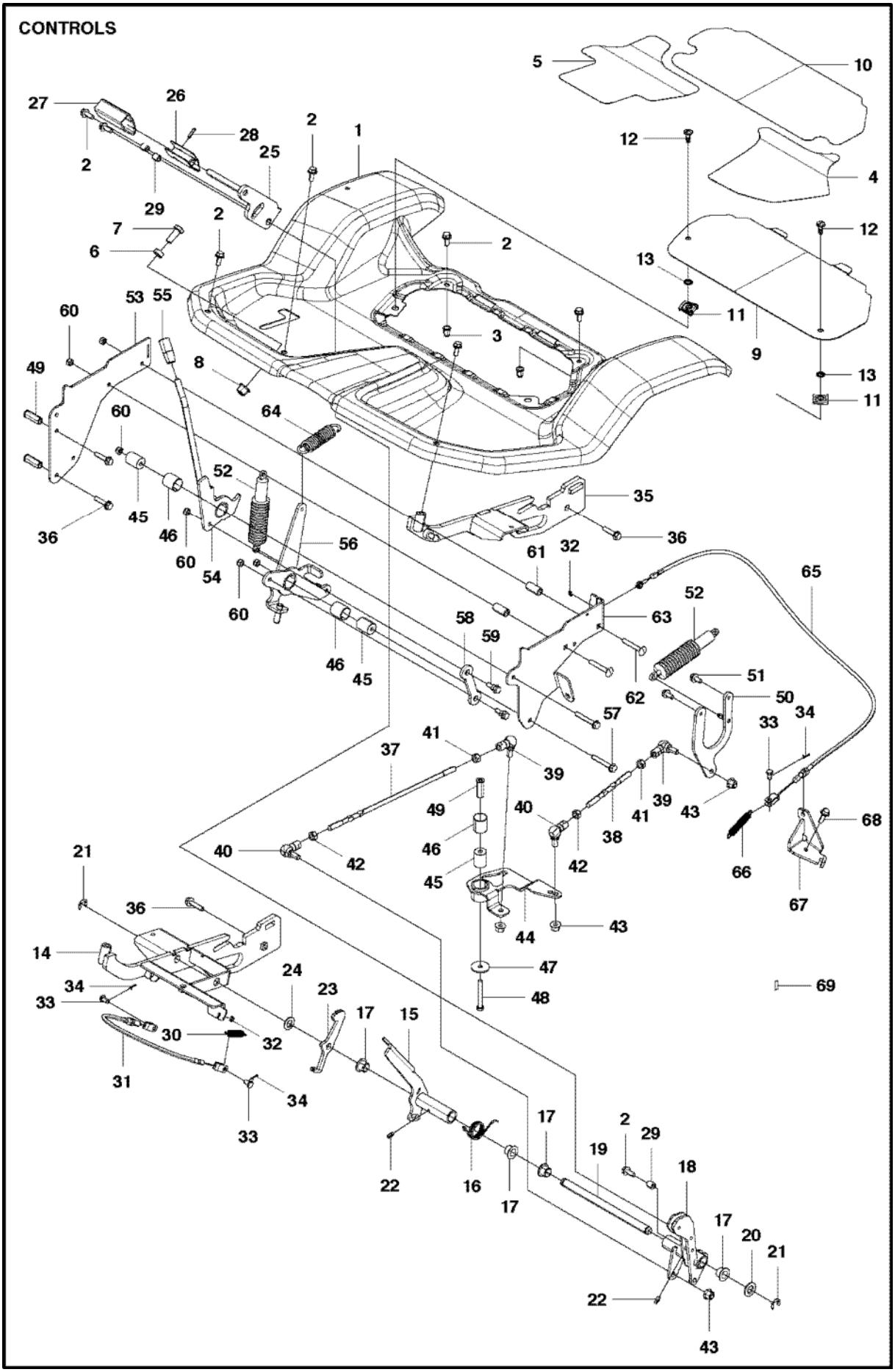
CONTROLS

Ref	Part No	Description	Remark	QTY KIT
1	575 75 03-01	SHEET		1
2	506 57 01-04	SCREW EHHFM		8
3	506 91 62-01	NUT		2
4	579 42 51-01	GRIP		1
5	579 42 50-01	GRIP		1
6	576 99 87-01	SLEEVE		1
7	725 25 36-71	SCREW EHHM		1
8	576 64 57-06	NUT FLANGE		1
9	579 41 08-01	LID		1
10	579 42 52-01	GRIP		1
11	575 88 21-01	RECEPTACLE		2
12	575 88 19-01	STUD		2
13	575 88 20-01	RETAINER		2
14	576 35 23-01	STAY		1
15	579 44 17-01	PEDAL		1
16	576 47 51-01	SPRING		1
17	506 55 43-01	BEARING		4
18	586 17 50-01	PEDAL ARM		1
19	576 34 89-01	SHAFT		1
20	734 11 86-01	WASHER		1
21	735 31 18-20	E-CLIP		2
22	738 88 10-01	LUBRICATION NIPPLE		2
23	586 16 95-01	LEVER		1
24	734 11 78-01	WASHER		1
25	579 29 68-01	PEDAL PLATE ASSY		1
26	535 47 99-01	FOOTPLATE		1
27	506 50 62-01	PEDAL RUBBER		1
28	721 43 09-70	SPRING PIN		1
29	579 29 44-01	SLEEVE		3
30	506 53 56-03	DRAW SPRING		1
31	576 35 22-01	WIRE ASSY		1
32	735 31 09-20	E-CLIP		2
33	721 83 99-01	CLEVIS PIN		3
34	721 61 52-01	SPLIT PIN		3
35	579 37 00-01	STAY		1
36	506 57 01-06	SCREW EHHFM		4
37	576 29 14-02	PUSH ROD		1
38	576 29 14-01	PUSH ROD		1
39	506 78 99-01	VINKELLÄNK DIN 71802		2
40	506 78 99-02	VINKELLÄNK DIN 71802		2
41	506 89 76-01	NUT		2
42	731 23 20-51	HEXAGON NUT		2
43	576 64 57-05	NUT FLANGE		4
44	579 44 09-01	CONTROL LEVER		1
45	576 35 15-01	SLEEVE		3
46	506 98 61-01	GLIDLAGER		3
47	576 35 16-01	WASHER		1
48	725 24 64-51	SCREW EHHM		1
49	576 43 42-01	HEXAGON NUT		3
50	579 44 89-01	CONTROL LEVER		1
51	506 57 01-03	SCREW EHHFM		2
52	506 93 83-01	DAMPING PIECE		2
53	579 30 36-01	BRACKET		1
54	579 32 54-01	ARM		1
55	521 90 35-01	KNOB		1
56	579 32 55-01	LINK ARM		1
57	506 57 01-07	SCREW EHHFM		2
58	579 30 38-01	SHEET		1
59	506 59 74-01	SCREW EHHFM		2
60	732 21 18-01	LOCK NUT		6
61	505 45 03-01	TUBE		2
62	535 42 38-02	SCREW RSQM		2
63	579 30 37-01	COVER		1
64	579 30 40-01	SPRING		1

Ref	Part No	Description	Remark	QTY KIT
65	579 32 87-01	WIRE ASSY		1
66	544 13 36-01	DRAW SPRING		1
67	579 30 41-01	BRACKET		1
68	506 57 01-05	SCREW EHHFM		1
69	580 66 78-01	LABEL		1